iJRASET
International Journal For Research in Applied Science and Engineering Technology

INTERNATIONAL JOURNAL FOR RESEARCH

IN APPLIED SCIENCE & ENGINEERING TECHNOLOGY

Volume: 5 **Issue:** XI **Month of publication:** November 2017

DOI: http://doi.org/10.22214/ijraset.2018.11371

www.ijraset.com

Call: 08813907089 | E-mail ID: ijraset@gmail.com

International Journal for Research in Applied Science & Engineering Technology (IJRASET)
ISSN: 2321-9653; IC Value: 45.98; SJ Impact Factor:6.887
Volume 5 Issue XI November 2017- Available at www.ijraset.com

Voltage Stability Analysis of Power System using Power World Simulator

Manish Parihar[1], M.K. Bhaskar[2], Dharmendra Jain[3], Digvijay Sarvate[4], Deepak Bohra[5]
[1,4,5]PG Scholar,[3]PhD Scholar, Dept. of EE, M.B.M. Engineering College, JNV University, Jodhpur, Rajasthan, India
[2]Professor, Dept. of EE, M.B.M. Engineering College, JNV University, Jodhpur, Rajasthan, India

Abstract: Voltage stability analysis has become more important as a result of inadequate reactive support voltage profile dropped in transmission systems. Thus voltage stability is a significant factor, which needs to be taken into consideration during the planning and operation of electrical power systems in order to avoid voltage collapse or total blackout. PV curve analysis is used as basic tool for voltage stability. Better results were obtained on 3 bus test system for different power factor conditions.
Keywords: PV curve, voltage stability, power world simulator, voltage collapse, power factor

I. INTRODUCTION

Power system voltage stability involves generation, transmission and distribution [8]. It mainly focuses on determining the proximity of bus voltage magnitudes to predetermined and acceptable voltage magnitude. Angle stability focuses on the investigation of voltage angles. As the balance between supply and demand changes due to occurrences of a fault or disturbances in the system[1],[2]. A power system is said to have entered a state of voltage instability when a disturbance results in a progressive and uncontrollable dip in voltage. In order to increase reliability of the power system, to balance power generation-demand and supply energy to load centre at far distant interconnection of power system increasing day by day. Eventually due to its size system prone to disturbances and cascade failure which lead to total blackout (voltage collapse) of power system. Since the steady state analysis only involves the solution of algebraic equations it is computationally less extensive than dynamic analysis. Thus, lot of work is carried out to determine voltage stability on static analysis method [5],[6].

II. THEORETICAL BACKGROUND

Newton Raphson iterative method is used for solving a set of various nonlinear equations with an equal number of unknowns. In this paper polar coordinate form is used [7]. As shown in figure the current entering at bus i is given by equation

$$I_i = V_i \sum_{j=0}^{n} y_{ij} - \sum_{j=1}^{n} y_{ij} V_j \qquad j \neq i$$

This equation can be rewritten in terms of the bus admittance matrix as
$I_i = \sum_{j=1}^{n} Y_{ij} V_j$, expressing in polar form we have

$$I_i = \sum_{j=1}^{n} |Y_{ij}||V_j| \angle \theta_{ij} + \delta_j$$

Complex power at i^{th} bus is $P_i - j\,Q_i = V_i^{*} I_i$

$$I_i = V_i \sum_{j=0}^{n} y_{ij} - \sum_{j=1}^{n} y_{ij} V_j \qquad j \neq i$$

This equation can be rewritten in terms of the bus admittance matrix as

$I_i = \sum_{j=1}^{n} Y_{ij} V_j$, expressing in polar form we have $I_i = \sum_{j=1}^{n} |Y_{ij}||V_j| \angle \theta_{ij} + \delta_j$

Complex power at i^{th} bus is $P_i - j\,Q_i = V_i^{*} I_i$

Substituting the value of current in complex power equation we get

$P_i - j\,Q_i = |V_i| \angle -\delta_i \sum_{j=1}^{n} |Y_{ij}||V_j| \angle \theta_{ij} + \delta_j$, simplify and separating real and imaginary parts,

©IJRASET (UGC Approved Journal): All Rights are Reserved

$$P_i = \sum_{j=1}^{n} |V_i||Y_{ij}||V_j| \cos(\theta_{ij} - \delta_i + \delta_j)$$

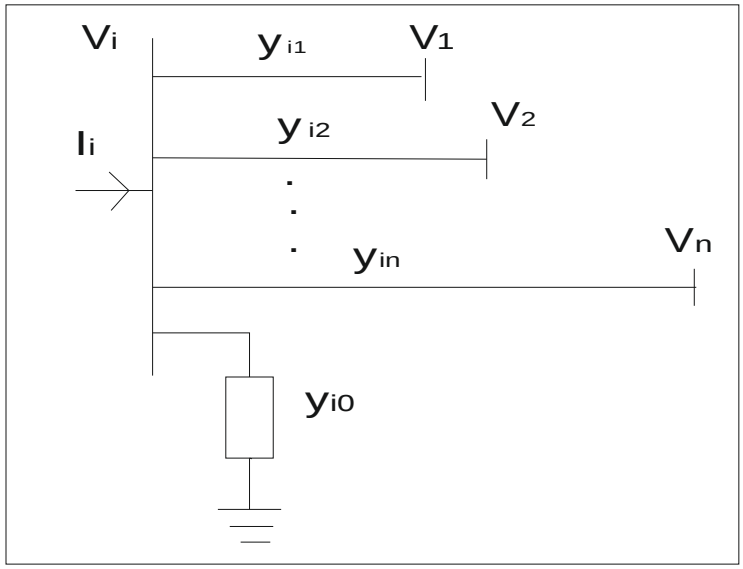

Fig. 1: i^{th} bus of the power system

$$Q_i = -\sum_{j=1}^{n} |V_i||Y_{ij}||V_j| \sin(\theta_{ij} - \delta_i + \delta_j)$$

Elements of Jacobian matrix is obtained by taking partial derivatives of above equations with respect to magnitude and phase angle of voltages i.e., $|V|$ and δ and computed with latest voltage estimate and computed power. The Jacobian matrix gives the linearised relationship between small changes in magnitude and phase angle of voltages i.e., $\Delta|V|$ and $\Delta\delta$ with the small changes in real and reactive power ΔP and ΔQ. Solution of equation provides better estimates of solution.

$$\begin{bmatrix} \Delta P \\ \Delta Q \end{bmatrix} = \begin{bmatrix} J_1 & J_2 \\ J_3 & J_4 \end{bmatrix} \begin{bmatrix} \Delta\delta \\ \Delta|V| \end{bmatrix}$$

The term ΔP and ΔQ known as power residue or mismatch, given by

$\Delta P = P_{schedule} - P$

$$\Delta Q = Q_{schedule} - Q$$

$$\begin{bmatrix} \Delta\delta \\ \Delta|V| \end{bmatrix} = \begin{bmatrix} J_1 & J_2 \\ J_3 & J_4 \end{bmatrix}^{-1} \begin{bmatrix} \Delta P \\ \Delta Q \end{bmatrix}$$

The new estimate for bus voltages are $\delta^{k+1} = \delta^k + \Delta\delta$ and $V^{k+1} = V^k + \Delta|V|$.

Above theory used in calculation of line flows, voltages at bus which is a tedious process. Thus simulation software power world simulator is used for analyzing the power system network and helps in better understanding of power system i.e. dynamic and real time monitoring of critical parameters like voltage, current, frequency, load angles, line flow etc. is possible.

III.CASE STUDY

Consider a three bus power system as shown in figure generator at buses 1 and 3. The magnitude of voltage at slack bus 1 is 1.05 pu and voltage magnitude at bus 3 is 1.04 pu and real power generation at bus 3 is 200 MW. Bus 2 is a load bus consisting of 400 MW and 250 $Mvar$. Line impedances are marked in per unit on a 100 MVA base,and line charging suspectances are neglected.

©IJRASET (UGC Approved Journal): All Rights are Reserved

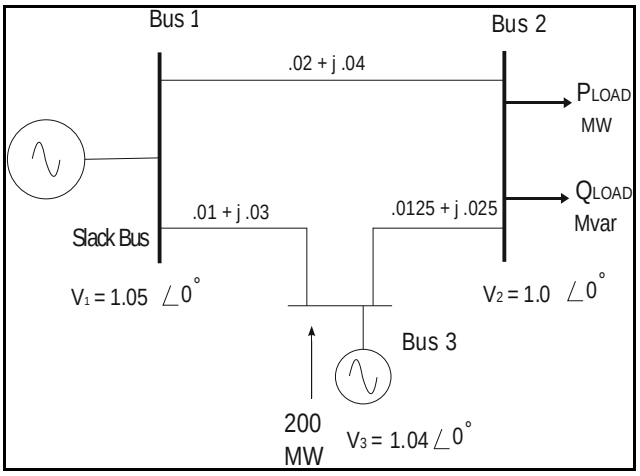

Fig 2: Three Bus System Network

Load real power ($P_{LOAD} \setminus P_2$) is incremented and load reactive power is ($Q_{LOAD} \setminus Q_2$) is given by $Q_{LOAD} = P_{LOAD} \tan\phi$ and constant generator real power $P_3 = 200\ MW$.

A. *Case Study I*

By varying load power P_2 and $Q_2 = P_2 \tan\phi$ and constant generator real power $P_3 = 200\ MW$ and power factor $\phi = 45°\ lag$. And the results obtained using power world simulator is shown below Table I:

TABLE I
Complex Power And Voltages At 45 Degree Lagging

P_2 MW	Q_2 Mvar	V_2 $p.u$	δ_2 $Degree$	P_1 MW	Q_1 Mvar	Q_3 Mvar	δ_3 $Degree$
0	0	1.04	1.63	-196	131	-121	2.67
100	100	1.02	.76	-96	145	-36.4	1.92
300	300	.97	-1.12	115	181	149.1	.30
600	600	.89	-4.41	474	265	485.7	-2.53
900	900	.77	-8.85	933	418	961.3	-6.34
1000	1000	.71	-10.9	1140	506	1195.9	-8.16
1100	1100	.62	-14.2	1445	660	1569.3	-10.97
1130	1130	.56	-16.4	1642	777	1831.9	-12.91
1133	1133	.54	-17.2	1702	815	1916.2	-13.52
1134	1134	.53	-17.5	1729	833	1954.3	-13.79
BLACKOUT CONDITION IS REACHED							

©IJRASET (UGC Approved Journal): All Rights are Reserved

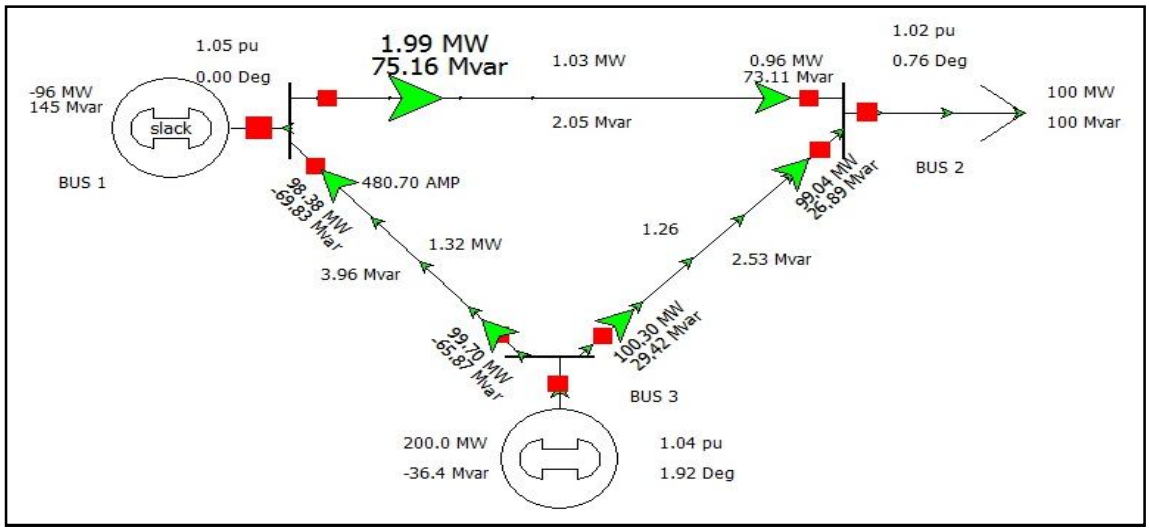

Fig 3: 3 Bus Systemat 45 Degree Lagging power factor

$$P_{2\,LOAD} = 100\,MW \text{ and } \quad Q_{2\,LOAD} = 100\,MVAR$$

B. Study II

By varying load power P_2 and $Q_2 = P_2 \tan\phi$ and constant generator real power $P_3 = 200\,MW$ and power factor $\phi = 20°\,lag$.And the results obtained using power world simulator is shown below Table II

TABLE II
Complex Power and Voltages At 20 Degree Lagging

P_2 MW	Q_2 Mvar	V_2 $p.u$	δ_2 $Degree$	P_1 MW	Q_1 Mvar	Q_3 Mvar	δ_3 $Degree$
300	109.19	1	-1.85	108	103	22.2	.35
600	218.38	.96	-5.67	437	97	196.6	-2.18
900	328	.90	-10	800	122	415.1	-5.04
1200	437	.83	-15.18	1219	192	705.5	-8.43
1400	509	.77	-19.58	1554	285	974.8	-11.27
1500	546	.73	-22.39	1756	358	1157	-13.06
1600	582	.68	-26.17	2014	474	1414.6	-15.44
1640	596.9	.64	-28.43	2158	552	1575.1	-16.84
1670	608	.60	-31.46	2339	664	1797.3	-18.68
1675	610	.57	-33.30	2442	737	1935	-19.77
1676	610	.57	-33.26	2439	734	1930	-19.74
BLACKOUT CONDITION IS REACHED `							

©IJRASET (UGC Approved Journal): All Rights are Reserved

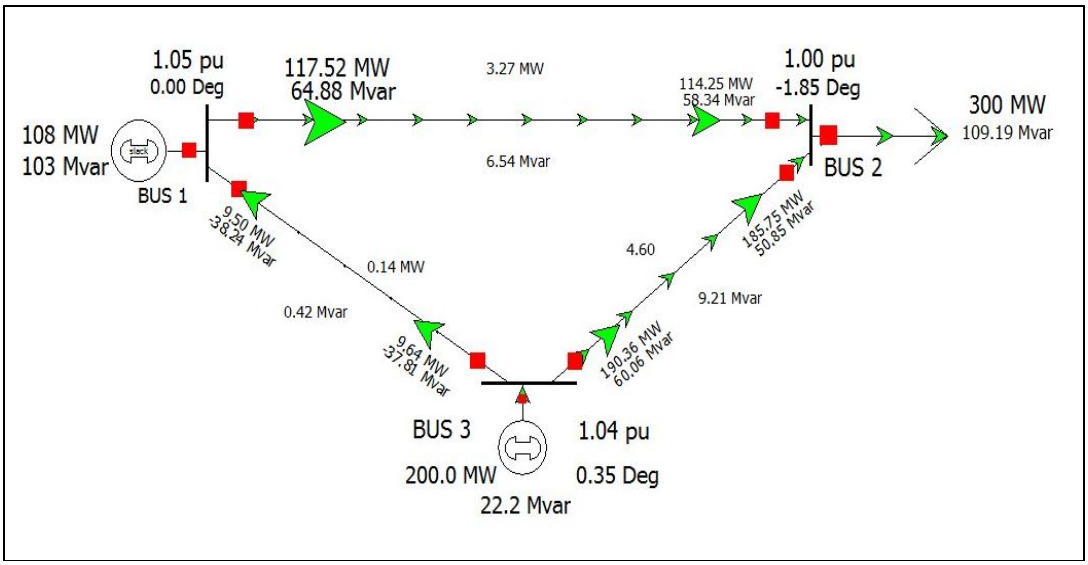

Fig 4: 3 Bus System at 20 Degree Lagging, $P_{LOAD} = 300\,MW$ and $Q_{LOAD} = 109\,MVAR$

C. Case Study Iii

By varying load power P_2 and $Q_2 = P_2 \tan\phi$ and constant generator real power $P_3 = 200\,MW$ and power factor $= 0°$ .And the results obtained using power world simulator is shown below Table III:

TABLE III
COMPLEX POWER AND VOLTAGES AT 0 DEGREE

P_2 MW	Q_2 Mvar	V_2 $p.u$	δ_2 $Degree$	P_1 MW	Q_1 Mvar	Q_3 Mvar	δ_3 $Degree$
500	0	1	-4.99	320	24	16.8	-1.27
1000	0	.95	-12.47	903	-17	234.5	-5.74
1500	0	.87	-21.63	1595	45	586.2	-11.22
1800	0	.80	-29.05	2117	180	934.5	-15.61
2000	0	.72	-36.66	2599	385	1344.7	-20.02
2040	0	.70	-39.12	2740	464	1487.3	-21.40
2080	0	.65	-43.28	2962	609	1739.5	-23.71
2085	0	.64	-44.54	3025	656	1818.4	-24.39
2087	0	.62	-45.82	3086	704	1899.5	-25.07
BLACKOUT CONDITION IS REACHED `							

©IJRASET (UGC Approved Journal): All Rights are Reserved

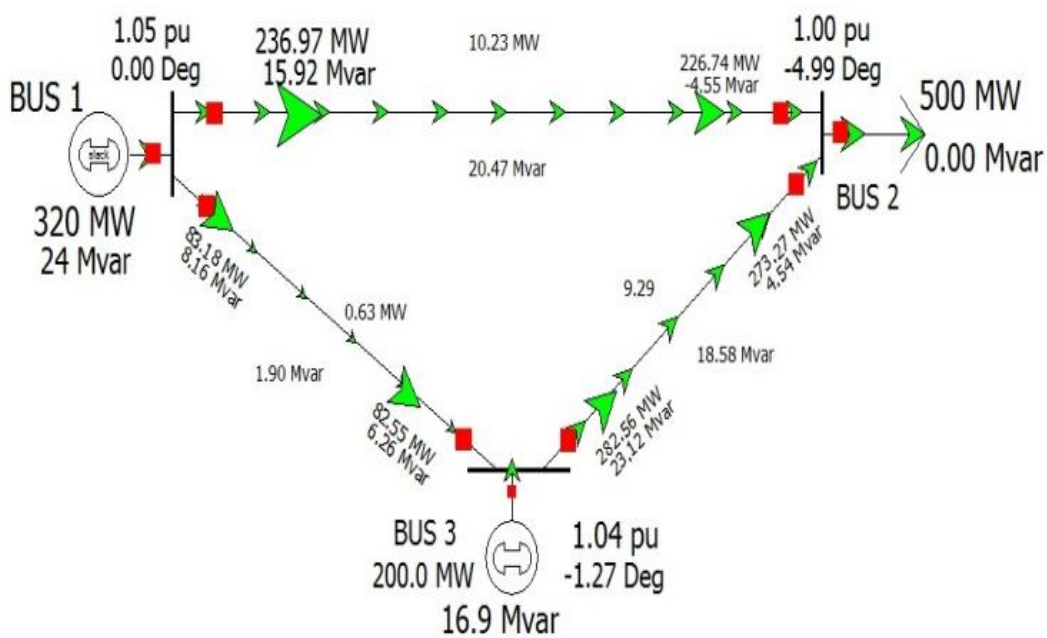

Fig 5:3 Bus System at 0 Degree $P_{LOAD} = 1500\ MW$ and $Q_{LOAD} = 0\ MVAR$

D. STUDY IV

By varying load power P_2 and $Q_2 = P_2 \tan\phi$ and constant generator real power $P_3 = 200\ MW$ and power factor $\phi = 20°\ Lead$. And the results obtained using power world simulator is shown below Table IV:

TABLE IV
COMPLEX POWER AND VOLTAGES AT 20 DEGREE LEAD

P_2 MW	Q_2 Mvar	V_2 $p.u$	δ_2 $Degree$	P_1 MW	Q_1 Mvar	Q_3 Mvar	δ_3 $Degree$
500	-182	1.03	-5.63	322	-45	-93	-1.27
1000	-364	1.01	-13.44	903	-155	8.4	-5.63
1500	-546	.97	-22.29	1571	-176	209.4	-10.70
2000	-728	.91	-33.43	2383	-50	584.4	-17.16
2300	-837	.84	-43.28	3036	189	1018.1	-22.86
2400	-873	.80	-48.49	3346	356	1281.9	-25.83
2470	-899	.73	-55.80	3731	628	1686.5	-29.91
2475	-900	.71	-58.25	3846	727	1830.9	-31.24
BLACKOUT CONDITION IS REACHED `							

©IJRASET (UGC Approved Journal): All Rights are Reserved

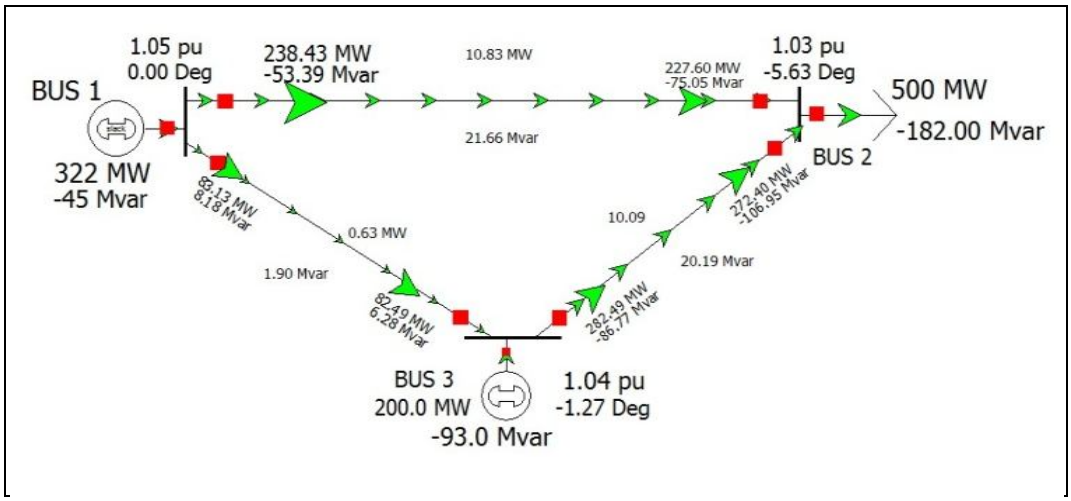

Figure 6:3 Bus System at 20 Degree Leading powe factor P_{LOAD} = 500 MW and Q_{LOAD} = −182 $MVAR$

When P_2 is increased further above voltage collapse point then simulation software generate message as shown below:

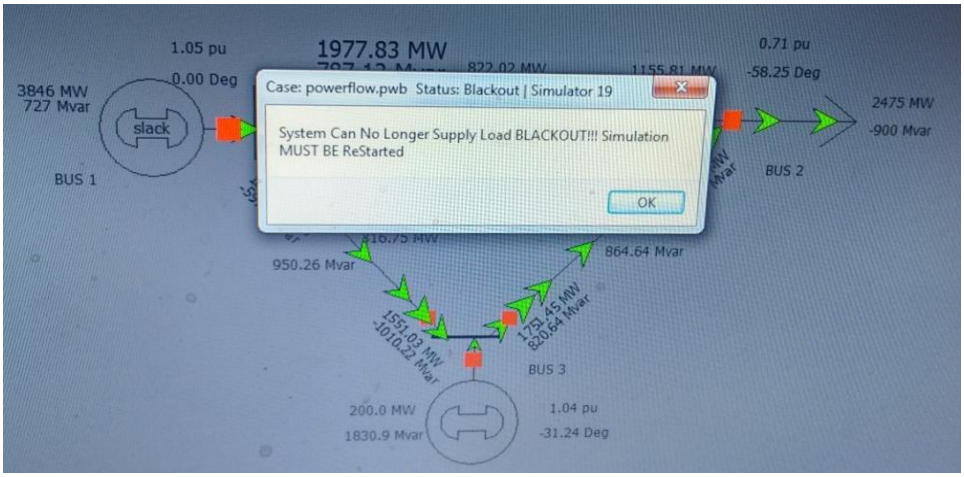

Combining all curves for different power factor we get

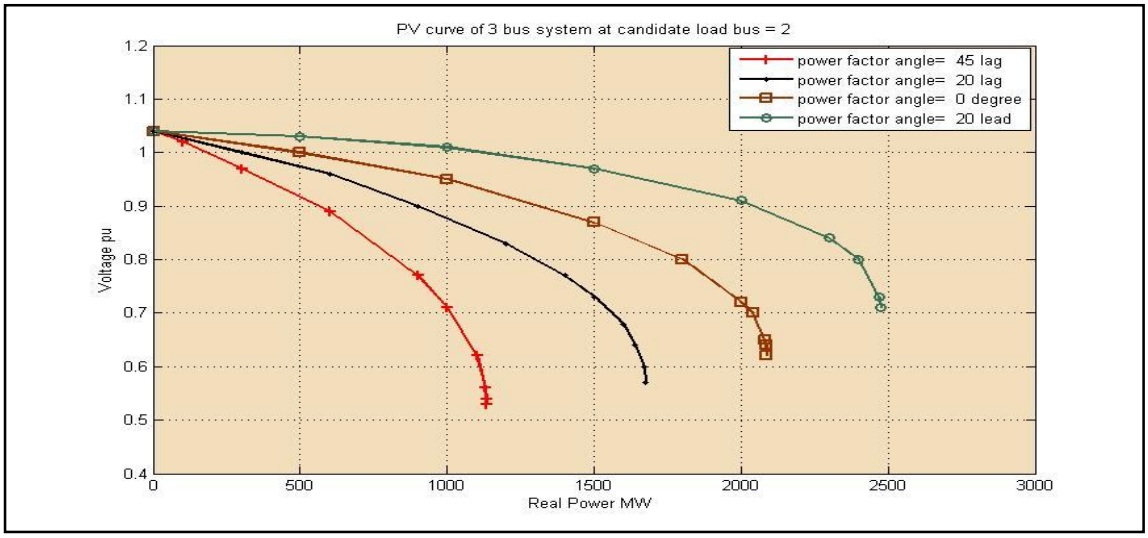

Figure 7: PV Curves at Different Power Factors

©IJRASET (UGC Approved Journal): All Rights are Reserved

From graphs and tables it is observed that as the load side power factor varies from lagging to leading condition then the loading of the power system increases and also voltage stability enhances. Thus, the monitoring of power system critical parameters such as voltages, load angle, line power flows etc. is possible and helps in study of its effect on power system operation.

IV. CONCLUSION

In this paper PV curve analysis is done for voltage stability analysis. Power flow program is developed using Matlab software and simulation in power world simulator to analyze power system network. It is observed that power factor at load side has significant effect on load ability, critical voltage point of the system. Thus reactive power compensation is necessary for stability purpose and to reduce drop in bus voltage. It is observed that deviation in generator load angles and create inadequate coupling between the generation system due to lag of synchronising power resulted in collapse of power system.

REFERENCES

[1]. Abhijit Chakrabarti, de Abhinandan, Mukhopadhyay A.K.,Kothari D.P., 2010,An Introduction to Reactive Power Control and Voltage Stability in Power Transmission Systems, PHI Learning Pvt. Ltd.

[2]. Basu, K. P., "Power Transfer Capability of Transmission Line Limited by Voltage Stability: Simple Analytical Expressions" IEEE Power Engineering Review, September 2000, pp 46-47.

[3]. Chemikala Madhava Reddy, Power System Voltage Stability Analysis, Department of Electrical Engineering June 2011

[4]. Khan, Asfar Ali, "PV Curves for Radial Transmission Lines". Accepted for Publication in The Proceedings of National Systems Conference 2007 to be Held at Manipal Institute of Technology from 14-15 Dec.2007.

[5]. P. Kundur. Power System Stability and Control. McGraw Hill, New York, 1994

[6]. Peter W. Sauer, University of Illinois at Urbana-Champaign,Reactive Power and Voltage Control Issues in Electric Power System

[7]. Hadi Sadat, 2002.Power System Analysis, 2nd ed., New York: McGraw-Hill.

[8]. M. Parihar, M.K. Bhaskar," Radial Transmission Line Voltage Stability Analysis", IJRERD (ISSN: 2455-8761), VOLUME02-Issue 09, September 2017, PP. 01-07.

[9]. Mamta Tilwani,S C Choube, "Prediction of Voltage Collapse in Power System using Different Indices", International Journal of Science and Research (IJSR) ,ISSN (Online): 2319-7064, 2013.

[10]. IEEE/CIGRE Joint Task Force on Stability Terms and Definitions, "Definition and Classification of Power System Stability", IEEE Transactions on Power Systems, Vol. 5, No. 2, May 2004, pp. 1387–1401.

©IJRASET (UGC Approved Journal): All Rights are Reserved

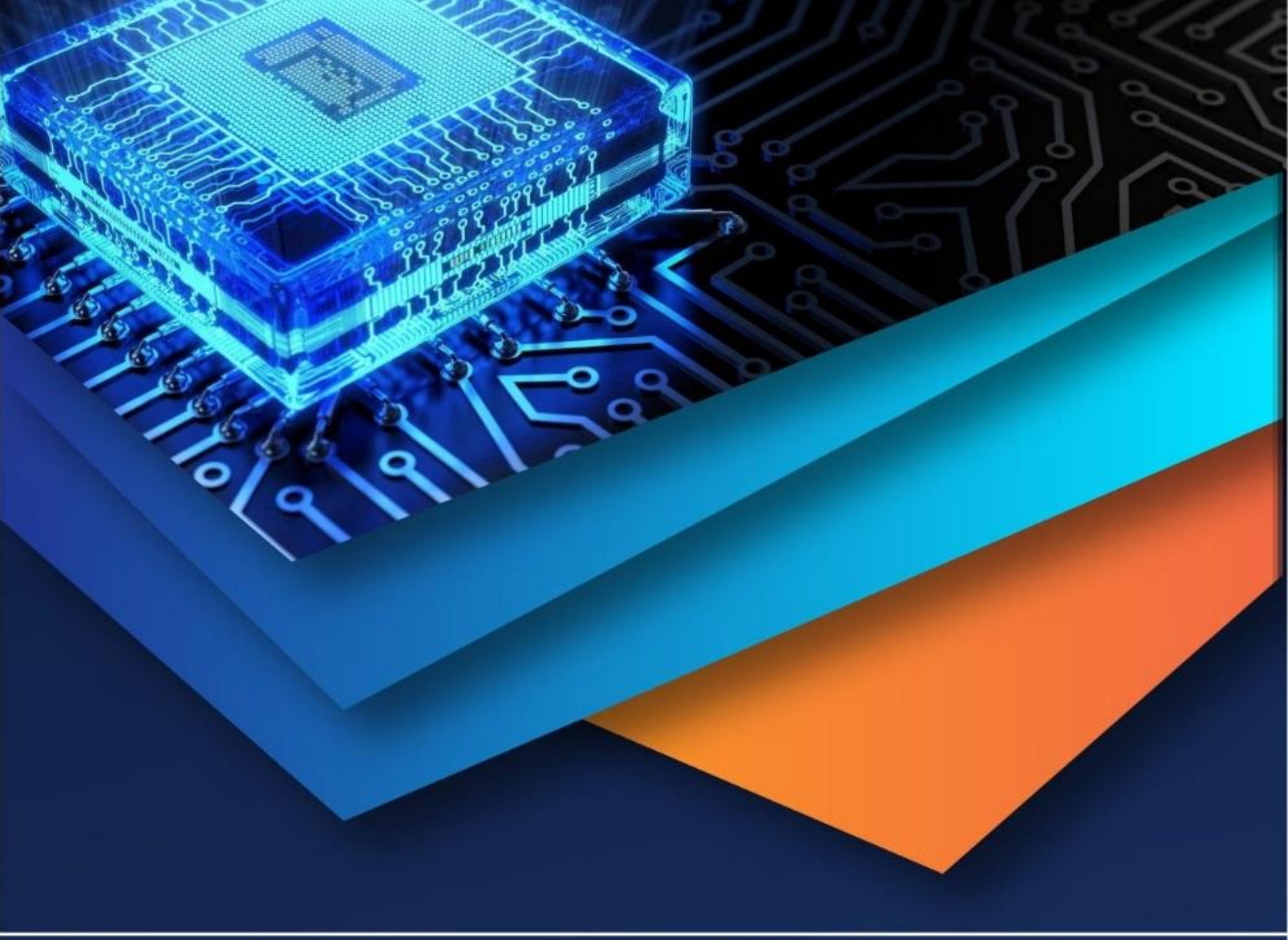

10.22214/IJRASET

45.98

IMPACT FACTOR: 7.129

IMPACT FACTOR: 7.429

INTERNATIONAL JOURNAL FOR RESEARCH

IN APPLIED SCIENCE & ENGINEERING TECHNOLOGY

Call : 08813907089 (24*7 Support on Whatsapp)