iJRASET
International Journal For Research in
Applied Science and Engineering Technology

INTERNATIONAL JOURNAL FOR RESEARCH

IN APPLIED SCIENCE & ENGINEERING TECHNOLOGY

Volume: 5 **Issue:** XII **Month of publication:** December 2017

DOI:

www.ijraset.com

Call: 08813907089 | E-mail ID: ijraset@gmail.com

International Journal for Research in Applied Science & Engineering Technology (IJRASET)
ISSN: 2321-9653; IC Value: 45.98; SJ Impact Factor:6.887
Volume 5 Issue XII December 2017- Available at www.ijraset.com

FPGA-based Railway Safety by using Ultrasonic and Infrared Sensors

Akash S.Ingle[1], Rohita Patil[2]
[1]*SKNCOE, SPPU Pune, India.*
[2]*Asst.Prof. Department of Electronics and Telecommunication SKNCOE, SPPU*

Abstract: Presently railroad assumes imperative part in individual for transportation. Because of persistent development of railroad in key division, for example, rail route speed, flagging framework, correspondence framework and so on and development of programmed framework, it is more vital to introduce security gadgets. One of these gadgets is snag fall finder on the track. It uses to distinguish sudden appearance of protest in wellbeing zone. Gadget comprise of a multisensory framework, it is in charge of identifying items on tracks. Ultrasonic (US) and infrared (IR) are for the most part utilized on FPGA (field programmable gate array) board keeping in mind the end goal to process information from sensors. These framework are isolated into two sections, initial segment is detection of signal. second part is observing system. Initial segment relates to producing and accepting acoustic and optical signals, which are put at inverse side of railroad track, individually. In first stage FPGA is utilized to encode motion from sensors and identifying object on the track or not. As worries about security such gadgets are imperative.
Index Terms: US (Ultrasonic sensor),IR (Infrared sensor)FPGA.

I. INTRODUCTION

Current transport system are composed under the standards of wellbeing and unwavering quality, and the improvement of fast railroad lines depends on such guarantees. Actually, the activities that are as of now being created demonstrate the steady requirement for development in railroad wellbeing. [1] Some of the conditions that get applicable consideration are the nature of the tracks and the presence of object on them.

On account of standard railroad lines, an large number of dedicated sensory system have been introduced in territories at or close level intersections to counteract impacts amongst trains and vehicles.[2] On fast lines, there are no level intersections, yet zones near extensions or passages are thought to be very basic, since items can fall onto the tracks. This can be brought on by the fall of a vehicle or any material transported by a vehicle onto the line. Avalanches can likewise occur at the entrances and exit out of passages. In these basic regions, if there is a system to identify the object of impediments, railroad traffic can be halted and conceivable mishaps can be kept away from. [2], [3] this system must have the capacity to recognize objects bigger than 50×50×50 cm3, the directions show that the system must be an infrared (IR) hindrance, comprising of emitter–receiver sets, each set at contradicting sides of the line which enhances the unwavering quality of the identification system.

As railroad systems are getting to be noticeably busier, they are required to work with expanding levels of accessibility and unwavering quality. To empower the sheltered operation of a railroad network, it is significant to distinguish the presence of object in the areas of a rail route track. The railroad track circuit for obstacle recognition is overall most generally utilized framework. To forestall mishaps, the recognition system is intended to be safeguard, [2], [3] implying that on account of a fault, the railroad area is accounted for as occupied. At the point when this happens, trains are at no time in the future permitted to enter the specific area. This keeps away from crashes, however prompts prepare delays. Additionally, disregarding the safeguard outline of the track circuit, there are circumstances in which the railroad area can be mistakenly detailed as free, which can conceivably prompt unsafe circumstances. In this way, to ensure both wellbeing and a high accessibility of the railroad arrange, it is vital to avoid track circuit disappointments.

II. LITERATURE SURVEY

A. Related Work

Hernandez et al., “FPGA-based track circuit for railways using transmission encoding,” IEEE Trans. Intell. Transp. Syst., vol. 13, no. 2, p.p. 437–448, Jun. 2012.

©IJRASET (UGC Approved Journal): All Rights are Reserved

Explains different code generation method, for example, kasami code. For instance different system encode the transmitted signal, so the receiver can correlate the receipt ion with this code and contrast its esteem and a decided limit. This encoding system noise including gaussing, to be safe to any system and burst noise Besides, the root mean square (RMS) voltage of signs measured in the track can be broke down, in this manner, if the RMS is high yet the correlation value is low, there is a error in the estimation. Some different arrangements utilize sinusoidal tones coupled to tracks with circuits tuned at specific frequencies to separate among various emitter and receivers. These are intricate strategies since the tuning procedure needs to incorporate track parameters, which are frequently an element of the track state (rails and ballast), climate, and other ecological conditions.

Proposes another encoding plan for the electrical connections amongst emitter and receivers of a railway track circuit.The encoding depends on Kasami codes, and accordingly, a few emitters and receivers can work in the meantime without cross interference. it is conceivable to accomplish palatable exhibitions and to reduce signal to noise ratio.

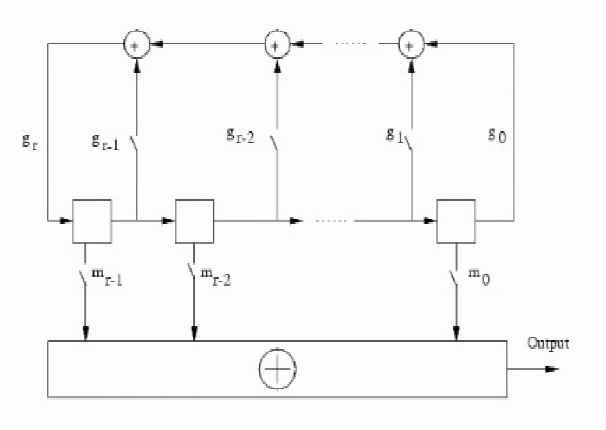

Fig.1:-Simple block diagram for kasami code generation.

which specify utilization of multiple constant multiplication design method in computation.

F. Alonge, M. Branciforte, and F. Motta, “A novel method of distance measurement based on pulse position modulation and synchronization of chaotic signals using ultrasonic radar systems,” IEEE Trans. Instrum. Meas., vol. 58, no. 2, pp. 318–329, Feb. 2009

The crosstalk issue pivotal for detection using mobile robot. show a strategy (error-eliminating rapid ultrasonic firing) in which the firing arrangement of the sensors is rotated, so that a sensor can't get the beam produced by another sensor in two back to back groupings in this manner, the sensor looks at two progressive readings and acknowledges just the readings close to each other distinctive approach is viewed as in light of the recurrence regulation of the sensor signals, therefore providing for every sensor an effectively unmistakable mark. strategy that uses the crosstalk to ascertain the relative position of the reflecting surfaces by methods for triangulation is introduced. "F. Alonge" gives a novel estimation strategy for the separation of a vehicle from an obstruction is proposed in view of the property of chaotic system to create the same chaotic signal when they are synchronized and the lack of care property of the beat position tweak pulse position modulation (PPM) method to the distortions of the transmission channel. In this paper, the previously mentioned thought is produced, with the point of getting an efficient low-cost transducer based on an ultrasonic an ultrasonic sensor that is useful for increasing then a navigation safety of a vehicle. The proposed strategy for tackling the issue comprises of the following step: A reference sinusoidal signal of reasonable frequency is added to a chaotic signal produced by an master chaotic signal, and the entire signal is modulated by the PPM technique since the data signal contains a chaotic part, the previously mentioned technique is known as the chaotic PPM (CPPM) technique. The modulated flag is transmitted by the transmitter of the sonar sensor, and the got echo is first demodulated to acquire the first data signal moved by the TOF and after that connected to a slave disorderly system synchronized with the master this permits the era of a chaotic signal that is equivalent to that inserted into the data signal shifted in time by the TOF, because of the lack of care of CPPM to the distortation presented by the transmission channel. This permits extraction of the sinusoidal signal embedded into the demodulated motion by essentially subtracting the chaotic signal produced by the slave system from the demodulated signal itself. From the distinction of the periods of the reference and recovered sinusoidal signals.

©IJRASET (UGC Approved Journal): All Rights are Reserved

Reliability is largely influenced by the design of the sensor utilized, the conditions in which the sensor is working, and the signal handling that is done by the system. In some unfriendly states of a railroad domain, there are frequently significant contrasts in the execution from different sorts of sensors, as each sort considered has its own particular innate shortcomings and constraints. For instance, climate conditions (rain, mist, and so on.) are of basic significance when utilizing cameras optical sensors deliver false alerts because of sun powered radiation or climate conditions a similar issue is discovered utilizing ultrasonic (US) sensors if the system is working in a turbulent air (e.g., when wind rates are high or fluctuating). Since the perfect sensor does not exist, multisensory barrier comprising of IR and US sensors, so that the disadvantages of utilizing a specific kind of sensor are adjusted for by the execution attributes from the other sort, and the other way around. For instance, it is extremely basic to get recognition issues with IR sensors in foggy days, though there is no issue with the US ones. On the other hand, in blustery days, such location issues can show up with the US sensors however not with the IR ones.

III. PROPOSED METHODS

It is centered around the plan of a productive and minimal effort field-programmable gate array (FPGA)- based design for the usage of the low-level preparing related with a US and IR multisensory barrier dedicated to the obstacle detection in fast railroad lines. The sensor preparing in view of signal encoding, has been enhanced for the relating execution, therefore enabling an ongoing execution to be accomplished.

A. Block Diagram & Explanation

The multisensory barrier is formed IR and US barriers, one consistently emitting and the other accepting, set at both sides of the railroad tracks. This plan gives a net of connections among emitters and receivers. Because of the way that the minimum measurements of the object be distinguished, the separation between constant transducers has been settled at 25 cm. Along these lines, if a object with least measurements is in the scanned region, no less than two connections of every technology (IR and US) are intruded. Then again, the separation amongst emitters and receivers is 14m, given by the width of the rail road, in spite of the fact that it could be longer.

Fig.2 shows the developed system for obstacle detection system, It is divided into three stages

1) Sensory modules based on IR and US transducers
2) The process units (low-level processing); and
3) The obstacle detection and location module (the monitoring system).

B. Signal Processing

The radiation originating from a few emitters reaches each receivers. It utilizes direct sequence code multiple division access technique to encode the emission for recognizing them as well as for maintaining a strategic distance from obstructions among emission of the same nature.[3] The recognition of the signal is performed utilizing correlation techniques.Each receiver corresponds the getting signal with the codes relegated to be identified (the ones having a place with the normal emission). The procedure gain gotten from the utilization of relationship systems gives higher resistance to commotion and ensures the barrier operation even under advers ecological conditions. Because of the way that two diverse physical sensors are utilized, it is important to characterize appropriate signal handling for every one of them, picking reasonable encoding and adjustment schemes. Subsequent to looking at changed encoding approaches, Kasamisequence are utilized for the US emission and complementary set of sequence (CSSs) for the IR ones. Both procedures ensure a high autocorrelation function (ACF),[2],[3],[4] so the emission can be effectively recognized, and a lessened cross-corrlelation function (CCF) among sequence, inorder to moderate interference in this different source emission scheme.

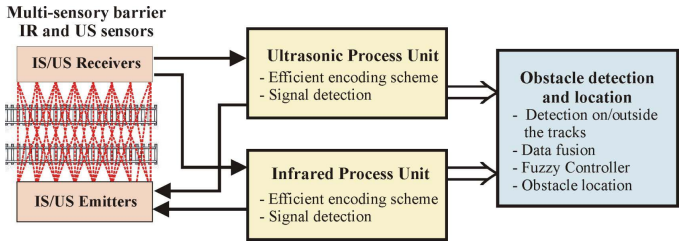

Fig.2. Block diagram of the development global detection system

©IJRASET (UGC Approved Journal): All Rights are Reserved

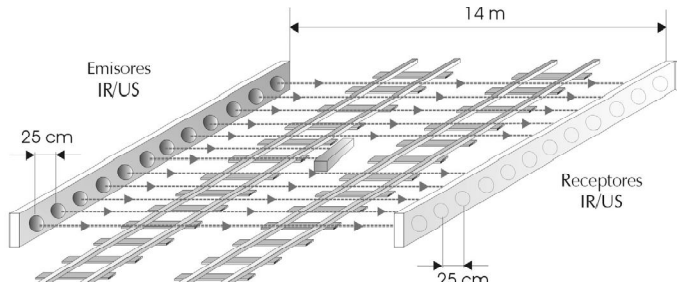

Fig.3:-Geometrical distribution of the multisensory barrier

IV. COMPUTATIONAL ANALYSIS

A. Detection System

The planned sensor system is made out of two multisensory barriers, i.e. one emitting and the other receiving, which are put at both sides of the railroad, as appeared in Fig.3. the base measurements of the protest be recognized are 50 × 50 × 50 cm, though the separation between adjoining transducers is 25 cm. Subsequently, if object with least measurements is in the checked range, no less than two connections are intruded. The separation amongst emitters and receivers is 14 m, given the width of the railroad line, in spite of the fact that the separation amongst emitters and receivers might be once in a while greater. if an impediment is inside the recognition territory for over couple of second, an alert must be created. Fig.3 demonstrates a proposition for an impediment location system. It is separated into three preparing levels: 1) the sensor modules (the multisensory obstruction) 2) the individual processing units and 3) a integration module for obstacle identification and location. Because of the apreature point of the emitters that are either IR or US, each emission achieves a gathering of receivers. This enables different connections to be set up in the multiple system, aside from those on the axial axis appeared in Fig.3 For instance, an IR emitters with a aperture point of ±2◦,at a separation of 14 m from a getting barrier,

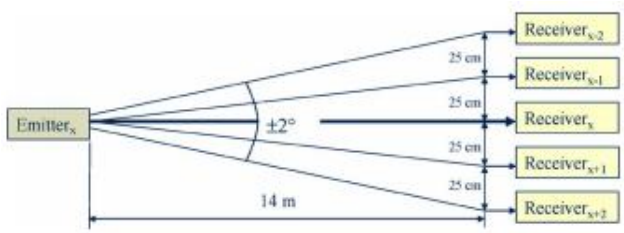

.

Fig.4. Emission aperture for an IR emitter

A. Kasami Sequence Generation

There are two sets of Kasami sequences: the *small set* and the *large set*. The large set contains all the sequences in the small set. Only the small set is optimal in the sense of matching Welch's lower bound for correlation functions.

Kasami sequences have period $N = 2^n - 1$, where n is a non negative, even integer. Let u be a binary sequence of length N, and let w be the sequence obtained by decimating u by $2^{n/2}+1$. The small set of Kasami sequences is defined by the following formulas, in which T denotes the left shift operator, m is the shift parameter for w, and $\oplus$ denotes addition modulo 2.

Small Set of Kasami Sequences for n Even

$Ks(u,n,m)=\{u \quad m=-1$

$u \oplus T^m w \quad m=0,\ldots,2^{n/2}-2$

Note that the small set contains $2^{n/2}$ sequences.

For mod(n, 4) = 2, the large set of Kasami sequences is defined as follows. Let v be the sequence formed by decimating the sequence u by $2^{n/2+1}+1$. The large set is defined by the following table, in which k and m are the shift parameters for the sequences v and w, respectively.

Large Set of Kasami Sequences for mod(n, 4) = 2

$K_L(u,n,k,m)=\{ u \quad k=-2; m=-1$

$V \quad k=-1; m=-1$

$u \oplus T^k v$ K=0,---- $2^n - 2$; m= -1

$u \oplus T^m w$ K=−2; m= 0,---- $2^{n/2} - 2$

$v \oplus T^m w$ K=−1; m= 0,---- $2^{n/2} - 2$

$u \oplus T^k w \oplus T^m w$ k= 0,---- $2^n - 2$; m= 0,---- $2^{n/2} - 2$

V. RESULTS

The IR/US multisensory barrier has been implemented according to the geometry shown in Fig. 2.shows the implemented prototype as well as a detail of the US and IR transducers. Ultrasonic ranging module HC - SR04 provides 2cm - 400cm non-contact measurement function, the ranging accuracy can reach to 3mm. The modules includes ultrasonic transmitters, receiver and control circuit. This transducer has a maximum frequency response at 40 kHz, and a beam width of 15°. With regard to the IR ones, the robo soft lab component, model numberSKURL430 has been used. This transducer presents a maximum of emitting energy at 0°.this is implemented on a Spartan 2 FPGA board by Elbert Inc. This is based on a Xilinx XC3S50A in TQG144 Package the obstacle is a box with the minimum size to be detected, 50×50×50 cm3

VI. CONCLUSION

An algorithmic proposal and its implementation for a track circuit. It is based on the encoding of the transmitted signal by a Kasami sequence, so it is possible to achieve satisfactory performances, even for reduced signal-to-noise ratios. Furthermore, the multiple emissions achieved without cross interference among encoded signals allows links to be established between successive track circuits, thus increasing detection reliability and railway safety.. The design of an emitter barrier and a receiver one each placed at one side of the railway. Several links are defined between emitters and receivers, based on US and IR transducers in order to detect the possible presence of obstacles. This allows the security, especially in some crucial places such as bridges or tunnels. The sensory signals have been encoded to allow simultaneous emissions and receptions avoiding crosstalk interferences.

REFERENCES

[1] J.Garcia,"FPGA-Based Architecture for a multisensory Barrier to Enhance Railway Safety", IEEE Trans. Instrum. Meas. Vol. 65, issue:6 pages 1352-1363, year:2016

[2] YuryS.Bekhtin, Andrey A. Bryantsev, Pavel V. Babayan, "Onboard rough estimation of point source coordinates for linear IR-sensor," Embedded Computing (MECO), 2016 5th Mediterranean Conference on, Pages: 158 - 161,June. 2016.

[3] A. Hernandez , "FPGA-based track circuit for railways using transmission encoding," IEEE Trans. Intell. Transp. Syst.,

[4] FPGA-Based Track Circuit for Railways Using Transmission Encoding, "IEEE Transactions on Intelligent Transportation Systems."Volume: 13, Issue:2, pp. 437–448, Jun. 2012.

[5] L. Qingyong and R. Shengwei, "A real-time visual inspection system for discrete surface defects of rail heads," IEEE Trans. Instrum. Meas., vol. 61, no. 8, pp. 2189–2199, Aug. 2012.

[6] Stefan Hensel, CarstenHasberg, Christoph Stiller, "Probabilistic Rail Vehicle Localization With Eddy Current Sensors in Topological Maps,"IEEE Transactions on Intelligent Transportation Systems, Volume: 12, Issue:4 Year 2011

[7] J. Trehag, P. Handel, and M. Ogren, "Onboard estimation and classification of a railroad curvature," IEEE Trans. Instrum. Meas., vol. 59,no. 3, pp. 653–660, Mar. 201

[8] J. J. Garcia et al., "Efficient multisensory barrier for obstacle detection on railways," IEEE Trans. Intell. Transp. Syst., vol. 11, no. 3, pp. 702–713, Sep. 2010.

©IJRASET (UGC Approved Journal): All Rights are Reserved

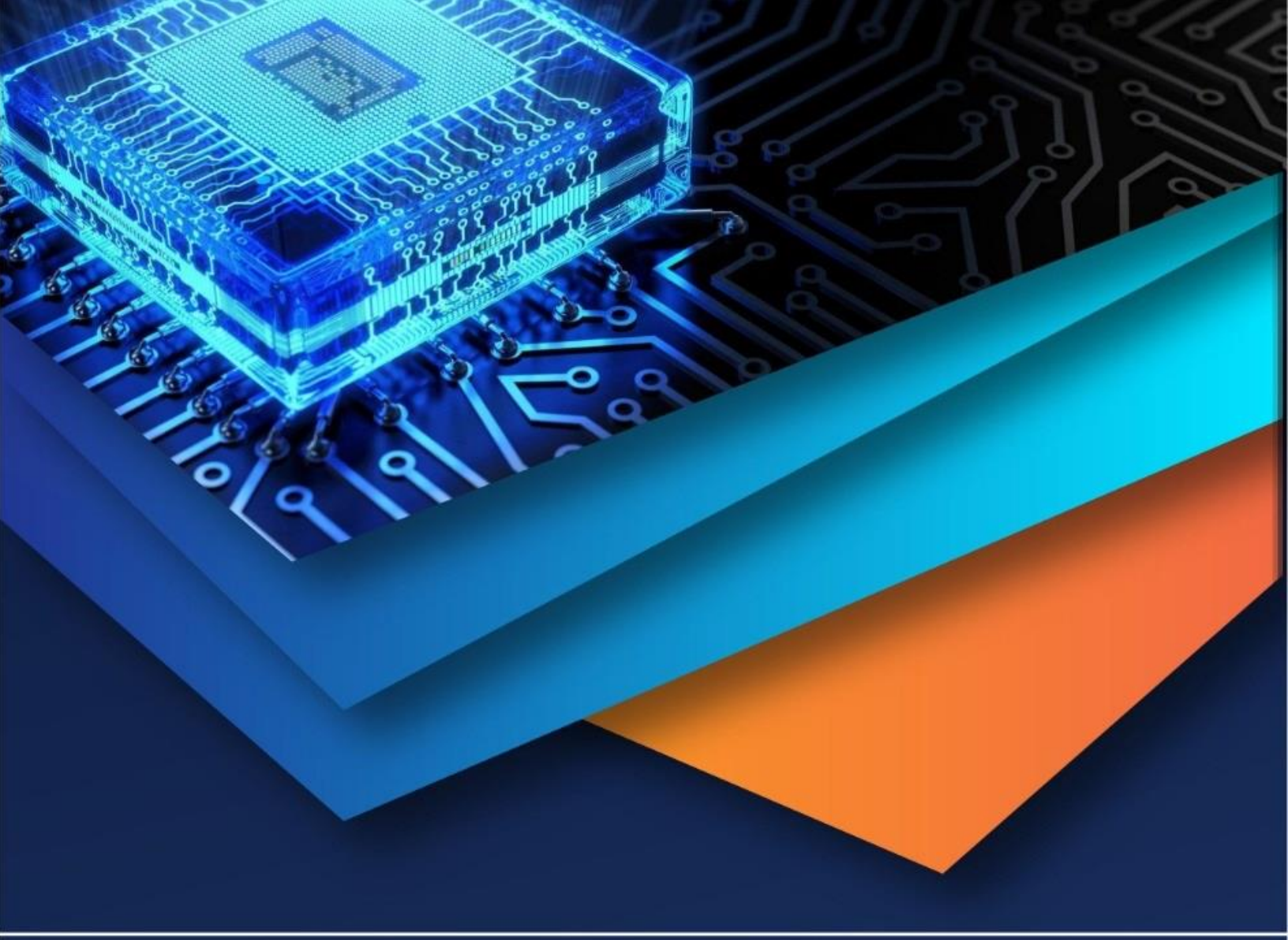

10.22214/IJRASET

45.98

IMPACT FACTOR: 7.129

IMPACT FACTOR: 7.429

INTERNATIONAL JOURNAL FOR RESEARCH

IN APPLIED SCIENCE & ENGINEERING TECHNOLOGY

Call : 08813907089 (24*7 Support on Whatsapp)