iJRASET
International Journal For Research in
Applied Science and Engineering Technology

INTERNATIONAL JOURNAL FOR RESEARCH

IN APPLIED SCIENCE & ENGINEERING TECHNOLOGY

Volume: 6 **Issue:** II **Month of publication:** February 2018

DOI:

www.ijraset.com

Call: 08813907089 | E-mail ID: ijraset@gmail.com

International Journal for Research in Applied Science & Engineering Technology (IJRASET)
ISSN: 2321-9653; IC Value: 45.98; SJ Impact Factor: 6.887
Volume 6 Issue II, February 2018- Available at www.ijraset.com

An Automated Design for ATC (Air Traffic Control) for Airport Monitoring System Using TORADEX Single Board Computer

R. Ajay Krishnan[1], P. Magesh kumar[2], R.Vignesh[3], Ms. Rupa Kesavan[4] Mrs. P. Veera Lakshmi[5]
[1, 2, 3]Student, [4]Assistant Professor, [5] Associate Professor Prince Shri Venkateshwara Padmavathy Engineering College

Abstract: Automatic advanced takeoff and landing system is most essential and required for all the modern airports to reduce downtime of activities and to improve the quality of air traffic. This project integrates all the networks which is located in different departments of today's airport. This paper provides a solution for perfect take-off and landing system with physical surrounding conditions of the airport which is economically affordable one. For a real demonstration of our idea, this project worked with embedded controller technology along with SBC (Single Board Computer). This project gives a detail demonstration of diagonal antenna function, rotation technique of radars also with ambient parameters like temperature, humidity, wind speed, wind direction etc. A real time model will be developed for this project.
Index Terms: Embedded controller, Single Board Computer, Toradex, Aircraft landing, Air Traffic Control

I. INTRODUCTION

In airport Air Traffic Control plays a major role to communicate aircraft, ATC guides the aircraft through the controlled airspace. While landing ATC gives instruction to aircraft where (which runway) and when it has to land. ATC gives information to the aircraft about the weather of the airport, exact location of the aircraft. ATC gathers data from various departments Radar control, Climatology (Metrology), Ground support. The responsibilities of ATC is to analyze the aircraft's perfect position and put into the right path for safe landing An Automated system to be developed to increase the speed of information sharing between various departments of Airports (Radar control, Climatology (Metrology), Ground support, Air Traffic Control). The above all to be connected to a single automated system with a single page application suitable for wireless transmission to be developed. . Voice communication to be enabled b/w control room and Aircraft

A. Motivation

Aircraft landing (ILS) - (Instrument landing system) there are four departments involved that are the Metrology (Weather), Radar (Flight position angle of sky), ATC (Analyzer and communication to Aircraft), GSD (Runway, taxiway organization). Now all the above are located in different areas, that's all to be formed as a single system now. To increase the speed on governing, communication and to reduce network downtime though various technologies introduced on the Air Traffic Control, that all involves many computers involvements. When for a single work, if many computers involves a time delay cannot be removed. One new embedded automated system will solve all these issues. Issues/disadvantages:

1) Network delay
2) Hack able system (It leads to an ATC system Hacking)
3) Delay due to multiple computer O
4) The multiple GUI screen makes panic

B. Proposed

Our proposed system is a single OS based system that connects all the essential parameters on a single board computer and processed for high speed connectivity between Climatology, Radar info, Ground Support, ATC Information. This project intended to use toradex Single Board Computer for this project. It is a complete computer built on a single circuit board. Single Board Computer has the several advantages over microcontroller and personal computer, like fast data acquisition, compactness, accuracy and virus free. It has some inbuilt I/O ports to connect the peripheral devices like Monitor, Keyboard, and ALS kit. Input will be given to the Single Board Computer and output of SBC connected to the computer monitor, computer monitor here used to monitor the data, which are all, acquired from an ALS kit by SBC.

C. Domain Introduction

Nowadays, most of the embedded systems are composed of hardware and software components executing concurrently and cooperatively. These systems are named embedded because they are tailored to specific functions and interface directly with the environment or with other equipment, as opposed to computer systems which interface with the end-user. Examples of such systems can be found in medical equipment, process control, avionics, communication systems and networking, printers, electrical/electronic appliances, telephony and telecommunications, among others. The market pressure of producing systems with ever-increasing complexity in shorter time urges for the use of formal methodologies and automation of the process of building embedded systems. Embedded system has various advantages that are its easy for mass production, highly reliable, small in size that makes system compatible, it has less number of interconnections, so speed is high, less expensive, it improves the overall product quality it optimizes the use of system resources, it can operate in low power and its help full to develop customized OS.

II. SYSTEM ARCHITECTURE

A system architecture or systems architecture is the conceptual design that defines the structure and/or behavior of a system shown in Fig 1.1. An architecture description is a formal description of a system, organized in a way that supports reasoning about the structural properties of the system. Single Board System gathers all the data from various departments of airport like Radar, GSD (Ground Support Data), Metrology Data. Customized OS will be developed in the single board system that process all the data and send the automated voice command to the airport. The single page application will be developed with better GUI helpful to understand the data.

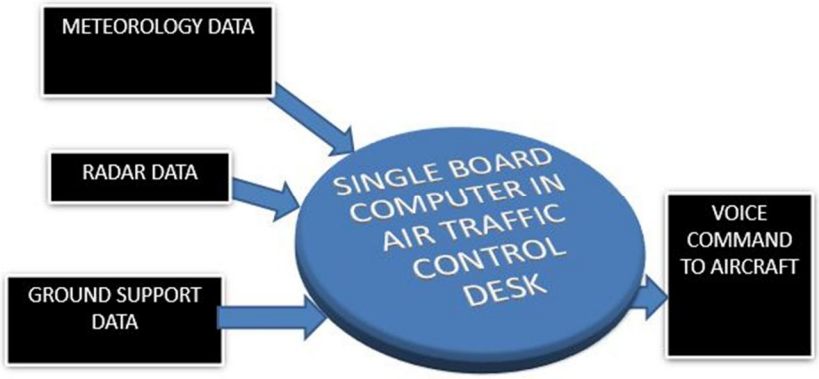

Fig 2.1System architecture

III. VARIOUS DATA

A. Metrology Data

Metrology Data means weather data like Temperature, Relative Humidity, Wind Speed, Wind Direction, Visibility and Fog. The weather might affect aircraft operations while takeoff and landing so weather information must give to aircraft.

Airport Temperature: Aircraft is a pressurized vehicle so pilot needs the information on the Outside temperature, and temperature information is given to the passenger.

Wind speed and Direction: There is a constrain for aircraft landing that is Opposite to wind aircraft has to land and Wind Speed in the airport should be less than 25km/HR.

Visibility and Fog: Fog may affect the visibility of the.

B. Radar Data

The radar data network is used as a main network in ATC, to find out the aircraft's location. The radar at a constant speed of 12.5 – 13.5 RPM (International Standard Speed) and collect data from various Aircrafts and their Geo position in the air. The collected data then fed to ATC for decision-making following shows the radar coverage range.

Airport Loop (Range): Covers 18nm

Radar Loop (Range): Covers 200km

IV. SENSORS INVOLVED

The parameters Temperature and humidity, Wind speed and direction, Fog and Visibility. Sensors involved to measure these parameters would be Thermistor (Temperature and humidity), Wind speed (Anemometer), Wind direction Ball clutch (Reed), Fog and visibility (IR sensors).

A. Thermistor

In industry various types of temperature detection are available, like thermocouple, RTD'S and Thermistors. Each of these sensors having some unique characteristics based on the applications and differs from one another. When we use thermocouple which is based on "SEE BECK EFFECT" required a cold junction compensation, which is expensive processed and have poor linearity. The next one RTD is having highest linear¬ity but has disadvantages in vibrations and very expensive because this is made up of Platinum. The third one and implemented in our project called THERMIS¬TOR (THERMAL RESISTOR) which comes under passive transducer classifi¬-
-Cation. Thermistor finds wide applications and advantages.
Here some of it.

1) Fast response. 2. Smaller in size.
2) Rugged. (Not affected by shock and vibration)
3) Good sensitivity.
4) Low cost.

A thermistor is a ceramic semiconductor, which exhibits a large change in resistance with a change in its body temperature. The word thermistor is actually a contraction of the words "THERMAL RESISTOR". Although there are both positive coefficient (PTC) and negative coefficient (NTC) are available, this project negative coefficient (NTC) type thermistor is used. These NTC Thermistors are composed of oxides such as the oxides of the MANGANESE, NICKEL, COBALT, COPPER, IRON and TITANIUM. The Thermistors have much better sensitivity than RTD's and are therefore better suited for precision temperature measurements. The availability of high resistance values allows the Thermistors to be used with long extension leads, since the lead resistance or contact resistance effects can be greatly diminished.
The non-linearity of the thermistor resistance-temperature characteristics outs a practical limit on the temperature span over which a thermis¬tor can be operated in measurement or control circuit. RTD's have lower sensitivity and are more linear and can therefore be used in applications, where the temperature spans are very wide. Thermistors has other important advantages over RTD's in that they are available in smaller sizes, with faster response times, at lower costs and with greater resistance to shock and vibration effects

B. Circuit Operations

For temperature sensing we follow the same circuit what we have used for flame sensing except the value of resistors. Here we have used potential divider, where a fixed resistor of 4.7Kilo ohms acts as R1 and thermistor being R2. According to potential divider formula, drop across R2
Vd = {V/(R1+R2)}*R2
Apart from this we have a specification chart of the ther¬mistors.
For room temperature R = 800 ohms
For 50øC temp. R = 650 ohms
For 100øC temp. R = 500 ohms
For 150øC temp. R = 350 ohms
For 200øC temp. R = 200 ohms For 225øC temp. R = 125 ohms
We use this thermistor to measure transformer temperature, which never crosses more than 150øC. We can very well use this thermistor for our application. As per the formula, available thermistor data and by imple¬menting the formula we will get the following results. If the transformer is in room temp.
Vd = {5/(4.7+0.8)}*0.8 =0.7407.....C(i)
For 100øC R = 500 ohms.....C(ii)
Vd = {5/(4.7+0.5)}*0.5 =0.456
As per Case (i) we get output voltage of 0.7407V. As per
Case (ii) we get output voltage of 0.456V.

By viewing the above data we are clearly known that case (i) output can drive the subsequent NPN transistor (because the voltage is above 0.7V). If the transistor in conduction the resistance between emitter and collector is relatively lower. So that the collector will be low that is fed to the inverting SCHMITT TRIGGER will be in high state. This will not raise fault information to computer, because we have designed the whole system for low logic in failure conditions

C. Fog

Fog means snow falling and its density. There is any snow falling, Flight's path isn't clear, so flight's path is changed to wrong way. Because it must to measure, IR sensors are used for this measurement, IR Emitter emits the rays and detectors receives the same rays, so it is detected and sensed.IR emitter and detector is arranged opposite direction to each other. When the rays are blocked, at that time the sensors are sensed. Suppose the fog is in-between of the IR sensor it blocks the rays. Thus the fog is measured on the monitored.

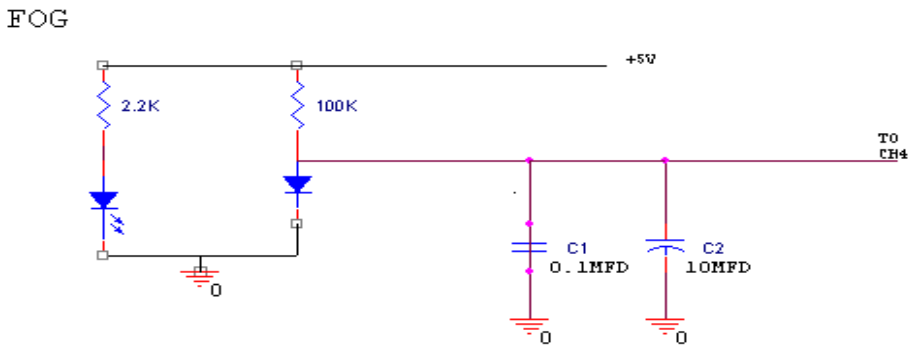

Fig 4.1 Fog

D. Visibility

It is one of the parameters in the system. This is a useful thing to pilot.It describes the pilot's vision, that is how far his vision is clear. Here is also IR sensors are used to find the visibility. IR emitter emits the ray that goes in straight line and it is knocked at clouds then the rays are reflected. This reflected the IR detector receives rays. The distance is long the visibility is clear, but the distance is short the reflected rays are quickly received by detected so the visibility is not clear

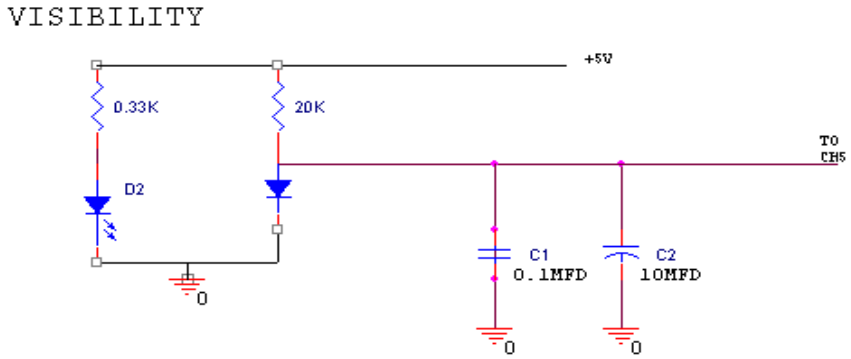

Fig 4.2 Visibility

E. Wind Speed

It is used for wind speed. Wind speed is measured by the rotation of the fan. When fan is rotated, the voltage is varied, that varying voltage is displayed which as like that speed of wind.

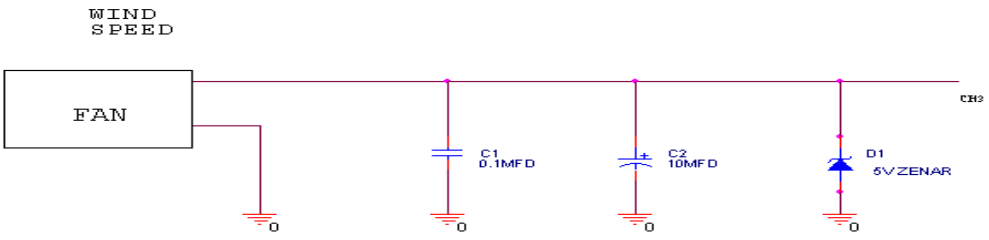

Fig 4.3 Wind Speed

F. Wind Direction

This circuit is used for wind direction .In this project wind direction just like that simulation. Actually this switching operation is low to high transaction. Switching output is connected to PIC and initially output is low when switch is operated, its output is changed low state into high state. Then the output is monitored in PC

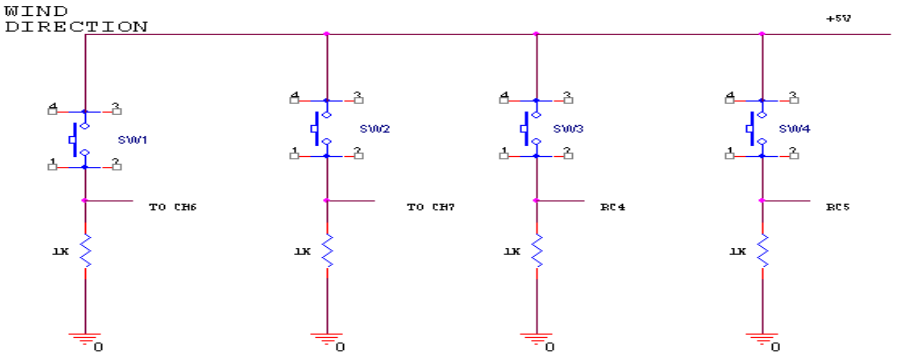

Fig 4.4 Wind Direction

V. SINGLE BOARD COMPUTER

A SBC (Single Board Computer) is a full computer built on a single circuit board with microprocessor, I/O port, memory and other interface port. Unlike computer single board computer do not have expansion slots. It allows us to develop a customized operating system which can run a desired application. This paper intended to use TORADEX Single Board Computer for this project. A single board computer becomes customizable only if the corresponding carrier board interfaces with its computer on module. Figure 5.1 shows that the how to create a customized single board computer.

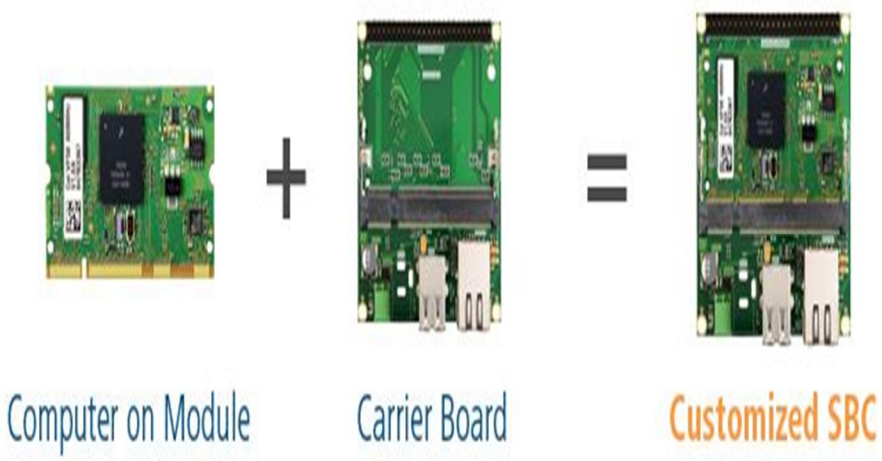

Fig 5.1

A. Computer On Module

Computer on module it is a type of the SBC. This is extended from the concept of system on chip as well as system in package it also called as the system on module, Computer on module connects with baseboard or carrier board which help full to make the interface between peripherals and computer on module. Figure 5.2 shows the computer on module

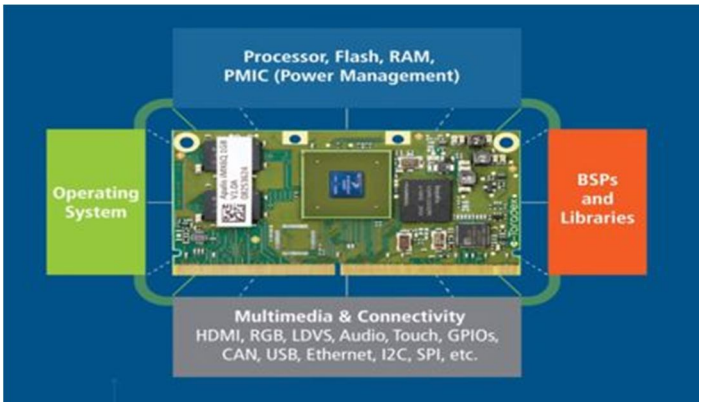

Fig 5.2

Computer on module has a microprocessor, Flash, Ram, Multimedia connectivity to make the interface and BSP's and Libraries. BSP stands for the Board support package toradex BSP is one of the most advanced available on the market, it helps to developer to create necessary applications in the COM. It has the pre-installed drivers, like PC no need to install drivers for each peripheral. This project used the Colibri PXA320 model for this project figure 5.3 shows the block diagram of Colibri PXA320 block diagram,

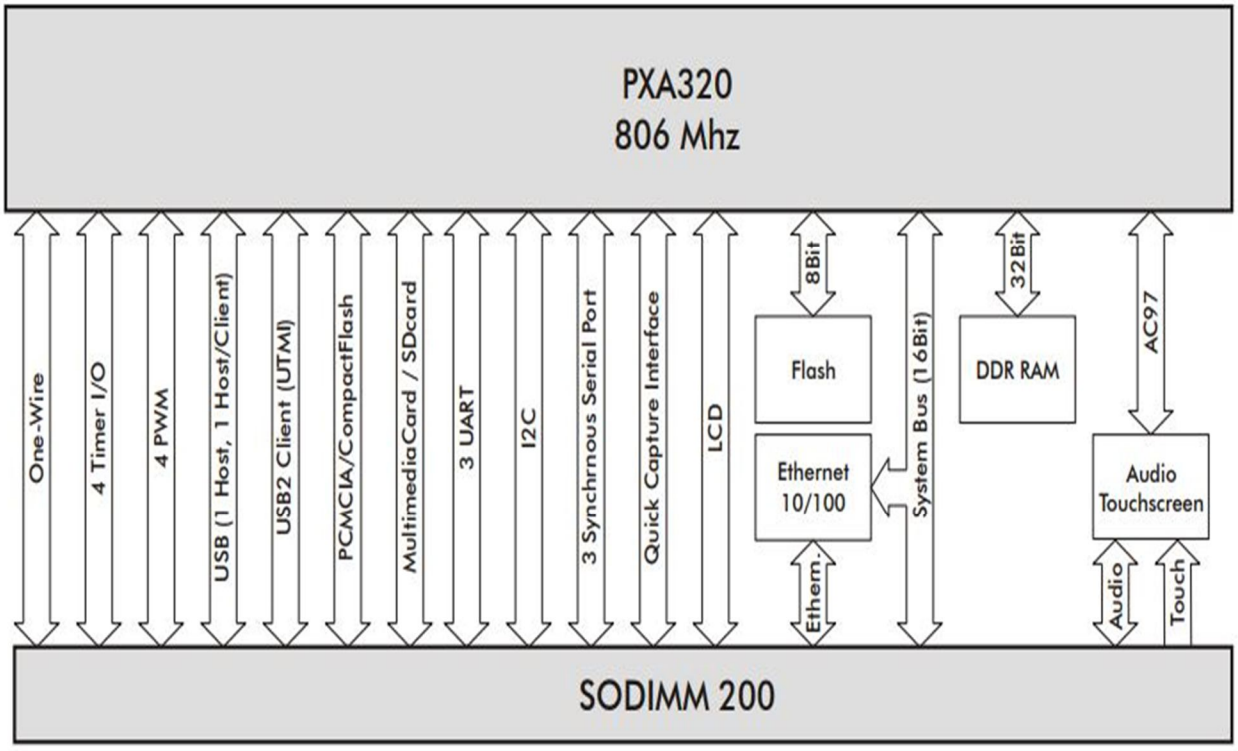

Fig 5.3

SODIMM 200, it means small outline dual in-line memory module, it's an alternative to the DIMM, SODIMM pin is interfaced with the carrier board and establish the connection between computer on module and carrier board. SO-DIMM needs less power voltage when compare to the DIMM.

B. Carrier Board

Carrier Board is used to make a connection with Computer on module or System on module the carrier board houses the application-specific connectivity and multimedia interfaces such as USB, Ethernet, UART, HDMI, etc. The carrier board connects with the computer on module through the standard connectors like SO-DIMM or MXM. Figure 5.4 shows that the carrier board which used in this project,

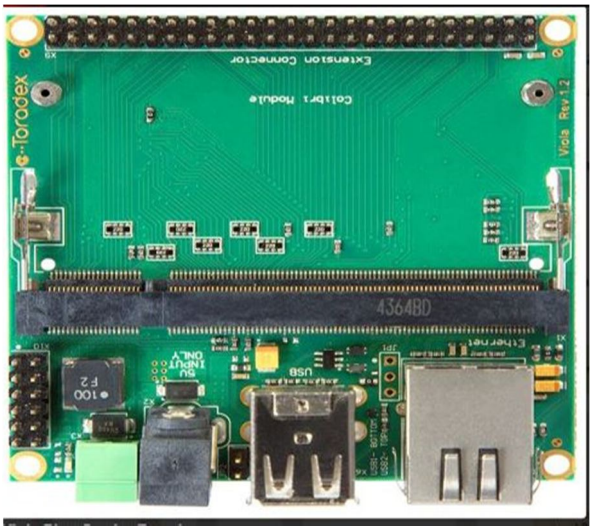

Fig 5.4

The customized single board computer is a combination of both computers with the module and the carrier board, Customized SBC offers a complete development platform. Carrier board available with various multimedia ports. Figure 5.5 shows the block diagram of carrier board and how it communicates with computer on module. Figure 5.6 shows the how to connect the carrier board and the computer on module.

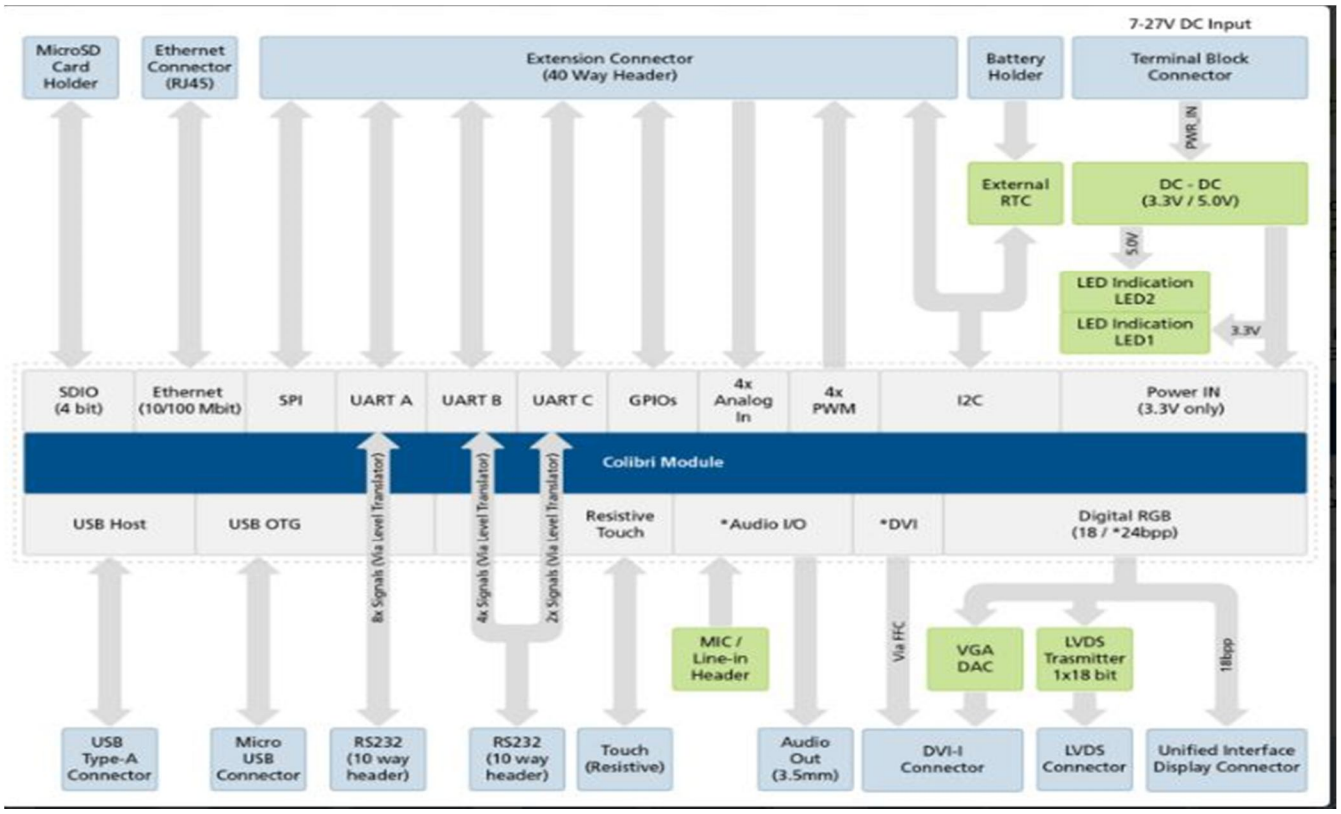

Fig 5.5

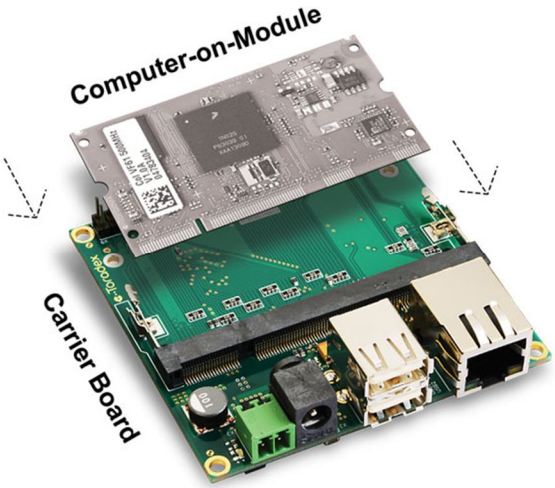

Fig 5.6

VI. RESULT

Using the JAVA (ANGULAR JS) software single page application is developed to show the processed data in the monitor and send the voice command to an aircraft. Figure 5.6 shows the GUI of aircraft landing system

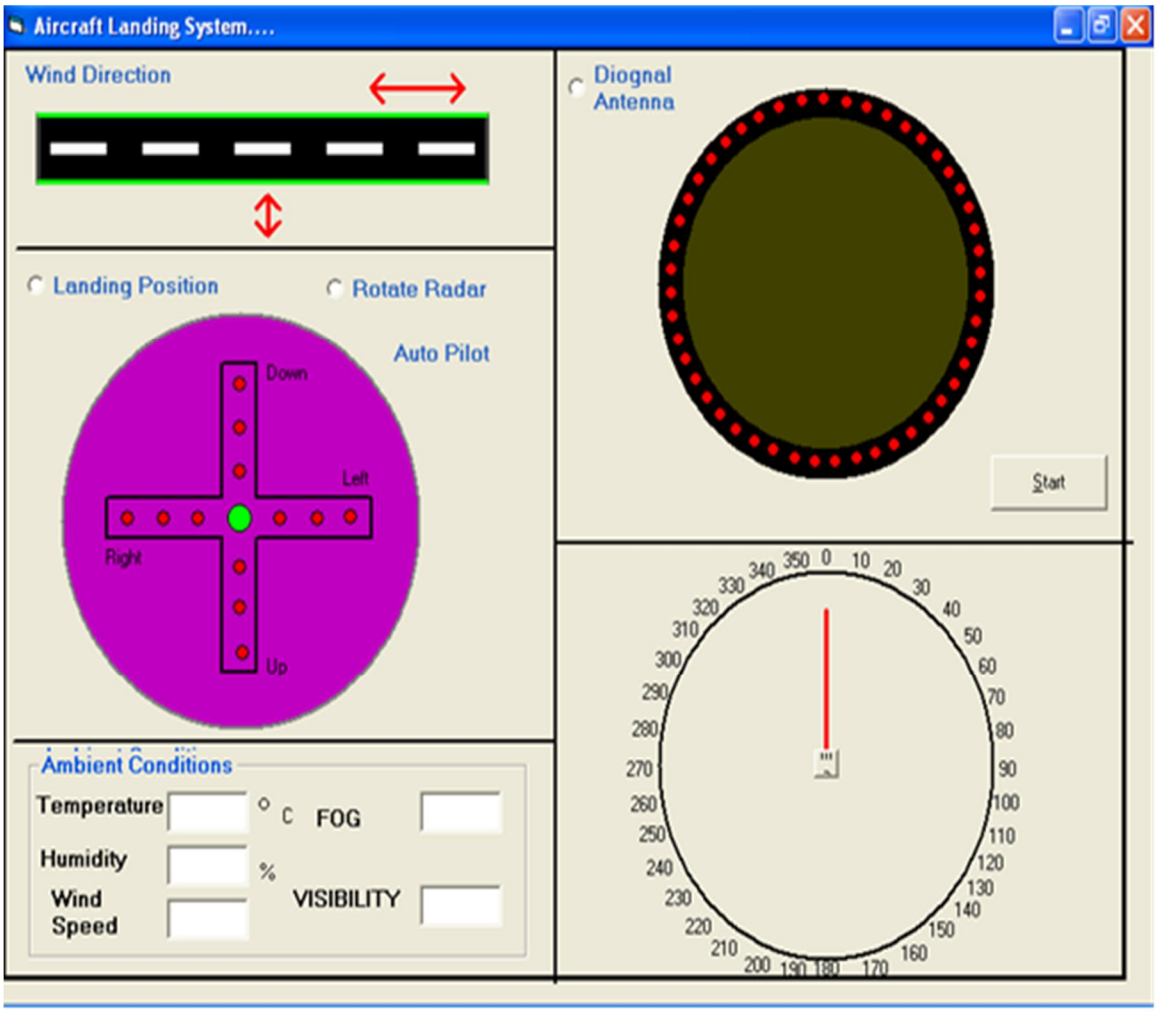

VII. CONCLUSION

This project helps Air Traffic Control (ATC) for monitoring physical parameters like temperature, humidity, wind speed and directions and also guide the Air Craft for a smooth take-off and landing at the airport. Integration of the different department's information reduces time delays by replacing multiple computers into a single computer (SBC), cabling issues, and network delay. And also this system is hack free because the own OS is developed in the Single Board Computer. By using this project ATC can monitor and control the

Air traffic and also the Air Craft accidents during take-off and landing in an effective manner.

REFERENCES

[1] Thirupoorani, Dr.V Saravanan, 3 P. John Thangavel "Specialty Oils Development For Monitoring Air Traffic Control For Airport" International Journal of Advanced Research in Basic Engineering Sciences and Technology (IJARBEST) Vol.3, Special Issue.24, March 2017

[2] Claudionor José Nunes Coelho Jr. Diógenes Cecílio da Silva Jr. Antônio Otávio Fernandes "Hardware-Software Codesign of Embedded Systems"

[3] Rolf Klomp, Clark Borst, Ren´e van Paassen, and Max Mulder "Expertise Level, Control Strategies, and Robustness in Future Air Traffic Control Decision Aiding

[4] Joost Ellerbroek; Mark Visser; Stijn. B. J. van dam; Max Mulder and M.M. Van Pusan "design of an urban three-dimensional Separation assistance display"

[5] Baxley, Briant; Hubbs, Clay; Karania, James; Shay, Rick 4 "use of data communication by the flight crew to conduct interval management operations to parallel dependent runways"

[6] Bergen. E. Barmore, Willian J, Lesley A, Weitz, Randalls "Interval management: development and implementation of an urban spacing concept

[7] Rasmussen, Information Processing and Human-Machine Interaction (ser. North-Holland series in System Science and Engineering), vol. 12, A. P. Sage, Ed., New York, NY, USA: Elsevier Science Publishers, 198

[8] M. R. Endsley and D. B. Kaber, "Level of automation effects on performance, situation awareness and workload in a dynamic control task," Ergonomics, vol. 42, no. 3, pp. 462–492, 1999.

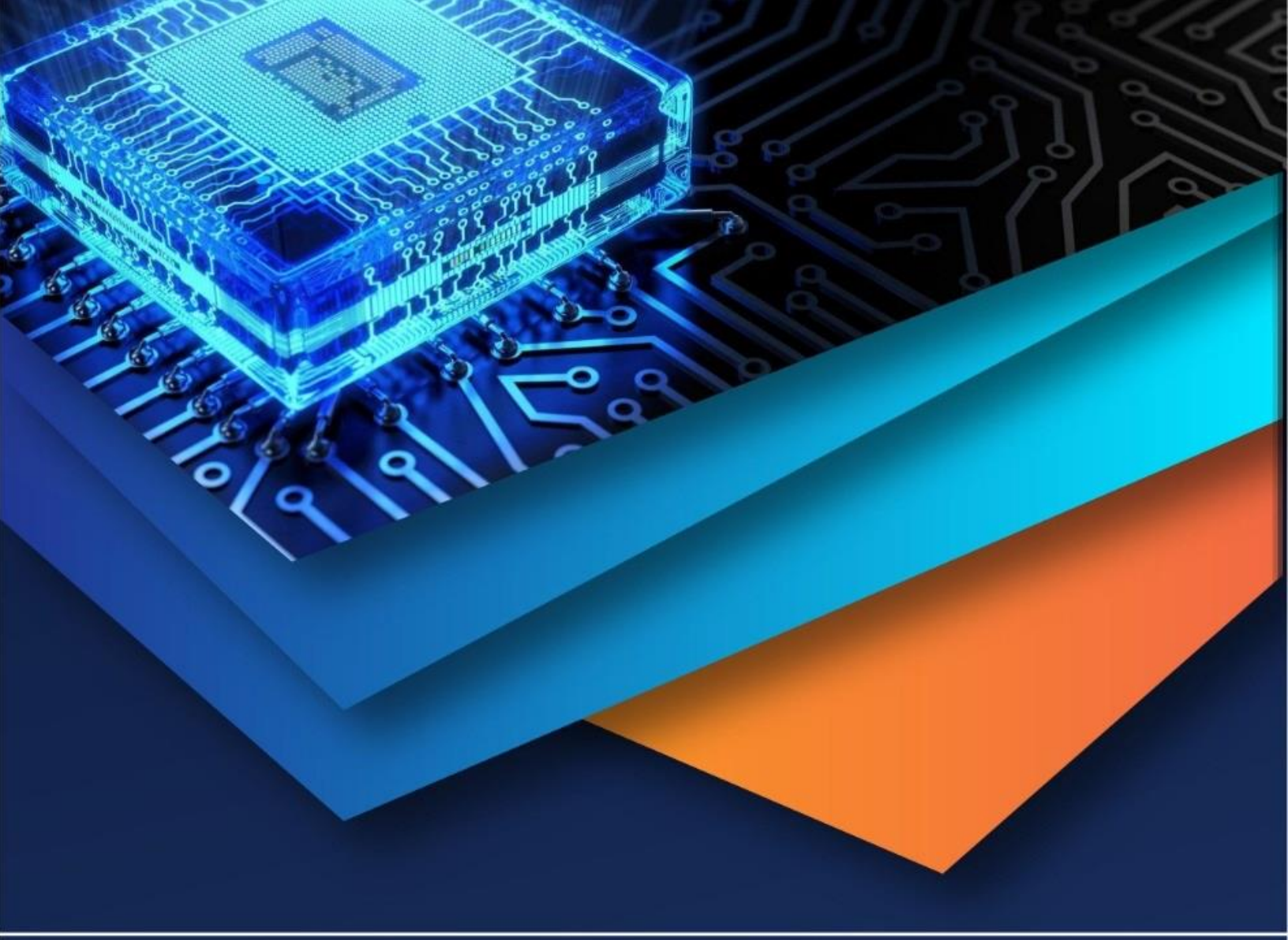

10.22214/IJRASET

45.98

IMPACT FACTOR: 7.129

IMPACT FACTOR: 7.429

INTERNATIONAL JOURNAL FOR RESEARCH

IN APPLIED SCIENCE & ENGINEERING TECHNOLOGY