iJRASET
International Journal For Research in Applied Science and Engineering Technology

INTERNATIONAL JOURNAL FOR RESEARCH

IN APPLIED SCIENCE & ENGINEERING TECHNOLOGY

Volume: 6 **Issue:** III **Month of publication:** March 2018

DOI: http://doi.org/10.22214/ijraset.2018.3138

www.ijraset.com

Call: 08813907089 | E-mail ID: ijraset@gmail.com

International Journal for Research in Applied Science & Engineering Technology (IJRASET)
ISSN: 2321-9653; IC Value: 45.98; SJ Impact Factor: 6.887
Volume 6 Issue III, March 2018- Available at www.ijraset.com

A Study on Deficiencies Causing Water and Energy Losses in the Roof Top Water Storage Tank Installations in India

G. Asirvatham[1], P. Jagathambal[2], E. J. James[3]
[1, 2, 3] *Water Institute, Karunya University, Coimbatore-641114, India.*

Abstract: Roof-top water storage tanks are observed to be overflowing many times in many buildings of rural and urban cities of India with consequent loss of water and energy. The consumer complaint portals are full of complaints of overflow, contaminated water, and no water supply. These are due to deficiencies of the water storage tank installations. In this paper, a systematic study is undertaken on the overflow problem to assess the extent of water and energy loss. An audit of practices and arrangements of the individual storage tank installations in Delhi has exposed the deficiencies in the installations in water level control. The quantum of water loss of an overflowing tank is estimated using theoretical analysis and experimental methods. And by a survey of a colony on overflow, it was found out that 7% of the water supplied was lost; and additionally 3.84% of the energy supplied was also lost; in one of the two colonies of Delhi. Automatic cut off controller and a smart controller with a capacitive sensor for level and capacitive sensor for flow sensing and microcontroller are suggested. The study has brought to light that 90 billion litres of treated water and 90 billion kW-hr of energy can be saved in a month in India by introducing affordable smart controller and by directing the households to adopt this device in their storage tanks.
***Keywords*: Storage tanks, overflow of water, water loss, energy loss, automatic controller, policy intervention**

I. INTRODUCTION

Water is essential for human civilisation and the history of plumbing goes to Indus Valley civilisation of 4000-3000 BC. Humans have made many inventions to bring water to their point of use, i.e., bathroom, toilet, kitchen, washing, cloth washing, gardening, livestock, etc. in their home, business and office buildings; with piping and taps and water storage tanks holding water for a day's need. Presently, city water in piped supply lines is pumped to the roof-top storage tank using water pumps controlled with an electrical switch. Similar system of pump and switch is employed to pump ground water from bore-well, in places where no piped water supply exists, or there is insufficient supply. Small water storage tanks with a water pump are seen in rural and other places and cities for pumping ground water. Surprisingly in many installations, no device is fitted to automatically switch off the pump when level in the tank reaches full. So the water pump is left running, leading to overflow causing loss of water and energy.

In a survey of 20 cities in South Asia [1], it was found that no city had continuous water supply and the average duration of supply was 4.3 hours per day. Another study of six cities brought to light that the Indian industrial city of Jamshedpur had a very low supply of 7 hours of water supply per day for 81% population, whereas Bangkok, Colombo, Kuala Lumpur, Manila and Singapore had 24 hour water supply for 100% population [2]. In Bangkok, in spite of a 24 hour water supply, the supply pressure was low in few places, leading the consumers to install water pumps. The annual report of Bangkok Metropolitan Waterworks Authority of 1999 reveal that 29.3% of water connections used water pumps, with 17.1% of these pumping water directly from supply pipes, and this figure went up to 60% in 2008[2]. Irregularity of water supply in the Mediterranean Coast of Spain has forced every single house to have a private storage tank to provide water for daily consumption; the municipalities have incorporated standard code for these storage tanks in their building bye-laws.[3]. In India, water supply to the households in cities and towns are intermittent. The average duration of water supply in 18 cities is 3.3 hours per day and average daily supply, in Delhi, Raipur, Bokaro, Bhopal, Hyderabad being 3,1.5,1.3,0.3-2 hours respectively[4].

In Delhi, the Delhi Jal Board (DJB) has received several complaints from Resident Welfare Associations (RWAs) on the wastage of water due to overflow of the roof top storage tanks in their colonies; the tanks of a few households overflow for long time. Large number of complaints on overflowing tanks is received from Rohini, Pitampura, SaritaVihar, Vasant Vihar, Mayur Vihar and few other colonies in Delhi [5]. DJB had established special courts to penalise people who waste water by the overflowing tanks in their houses; in Vasant Kunj C1 Block alone, 25 challans were issued with fines of Rs 2000 in 2010 [6,7]. Complaints of overflow of neighbours' rooftop storage tanks are recorded in the DJB web site [8]. These complaints are about ½ an hour to 2 hours of overflow

©IJRASET (UGC Approved Journal): All Rights are Reserved

wasting 1000-3000litres per day from colonies spread throughout Delhi, i.e. Shalimar Bagh, Nirankari Colony, Pitampura from North Delhi; Shahdra, Sonia Vihar, Anandvihar from East Delhi; Anand Parbhat, Karol Bagh, Patel Nagar from Central Delhi; Vikaspuri, Janakpuri, Mansorover Park, BasaiDharapur from West Delhi and Lado Sarai, Sheik Sarai, Saini Enclave, South Extension, Mount Kailash, Vasant Kunj and Kirari Village from South Delhi.

Indian Consumer Complaints Forum, a web portal site which is registering complaints of water wastage due to the overflow of tanks, have recorded complaints from many cities of India, viz. Ghaziabad, Pune, Jodhpur, Mumbai, Chennai, Nagpur, Saharanpur, Kolkata, Kota, Bangalore and Aligarh; the overflow occurring for 2-6 hours and water loss of 3000 to 5000 litres per overflow in few cases.[9]. Chandigarh Municipal Corporation also had fined 258 property owners and collected Rs 10 lacs in three months in fine for wasting water by overflow of their tanks [10]. Amritsar Municipal Corporation reports of penalising many households for wasting of water by the overflow of their tanks [11]. Similarly through CPWD online complaint website it was found that in Government quarters in Mumbai, Delhi, Pune and other cities the overflowing tanks waste water for long time even though it may be 1% of houses, the water loss is significant as they have given figures of 3000 to 5000 litres of water wastage in a day. Above complaint web portals also consist of complaints of contaminated water supplied by DJB, and also many complaints of no water supply.

II. MOTIVATION FOR THE STUDY

In times of water shortage, observing water wastage by overflow of roof top storage tank is an eyesore. Again the overflow water causes problem for the buildings and also causes stagnation in few cases and also this brings the wrath of the neighbour and the corporation. This is not taken seriously by the Consumers and the Utilities. The households are not having any standard controller for installation in their tanks for switching off the pump when tank is full. There is no sensor for sensing the water supply. So when the pump is operated with no water in supply line, it can suck contamination into the water line and the water in the tank will be contaminated; also result in wasted energy in pump run sometimes damaging the pump too.

India has less fresh water resources i.e., only 4 percent of fresh water resources for 16 percent of the world's population and it is expected that by around 2020, India will be a 'water stressed' state with per capita availability declining to 1600 cubic metre/person/year [12]. Secondly, many cities have a shortage of water with a huge gap between supply and demand of treated water. In 2011, the total water supplied in Delhi, was 3199 million litres per day [MLD] as against the demand of 4088 MLD [13].Thirdly, the cost of treated water is high and the energy used for pumping this supply is also considerable. The Delhi Jal Board (DJB) which supplies water to Delhi spends Rs 28/kl for water treatment and supply. The energy spent in pumping is 1.5kW-h/kl. In addition, a household spends an average of 0.6 kW-h/kl of electricity to pump the water to their storage tank. Fourthly, India has a large number of households with pump and tank system of water storage; and piped water supply to the premises are provided to70.4 million households and those having tube well with pump is 24 million [14]. Any small percentage of these households allowing overflow will result in large water loss. Considering these points, it was considered necessary to study and analyse this overflow phenomena and quantify the losses in water and energy and to identify the deficiencies in the storage installations so that remedial solutions can be implemented.

III.METHODS AND MEASUREMENTS

To record the deficiencies in the installations of the roof top water storage tanks, a Visual audit was conducted. In order to estimate the water and energy losses, a theoretical study of overflow, and an experimental study of a overflowing tank was carried out. Actual losses are estimated by conducting a real time survey on overflow in two colonies.

A. Visual Audit of Storage Tanks-Arrangements and Practices

The pumps are of 0.5 to 1 HP capacity and are generally connected directly to the municipal water supply lines or to the bore well. Vertical Plastic tanks are preferred and installed as water storage tanks, considering the cost, light-weight and minimum maintenance. These roof-top water tanks come in various sizes, viz. 105 cm diameter and 105 cm height/ 90 cm diameter and 90 cm height/ 120 cm diameter by 165 cm height/ 105 cm diameter by 125 cm height and in capacities of 500, 750, 1000 and 2000L. Electrical switch for the water pump is fixed in the kitchen or nearby area to turn OFF and ON the motor. Pumped water is taken to the storage tank through a pipe into the inlet fixed at the top of the tank and outlet pipe for distribution inside house plumbing and a small overflow pipe is fixed at the other side of top of the tank.

Various devices are fitted for controlling overflow. Float valves are fixed at the storage tank to close the water flow when level reaches full. Float switch (magnetic) to operate an alarm circuit or to cut off the power supply to the pump motor is available. Alarm device using a DC contact points at the top of the tank to raise the alarm on tank full condition are also fixed. Non-contact sensors

©IJRASET (UGC Approved Journal): All Rights are Reserved

using principle of capacitance are developed to sense the level of water in the tank by measuring the change in capacitance according to the level of water in the air-vent pipe attached at the outlet plumbing. The other non-contact sensor uses the principle of the delay time of ultrasonic wave according to level of water.

Mechanical float cut off is used to trigger a relay to switch off the pump when the float makes an electrical cut off when the level is reached. Automatic controllers which will switch of the pump when tank is full are fixed by rich households who can afford to pay higher price of Rs 6000- 9000.

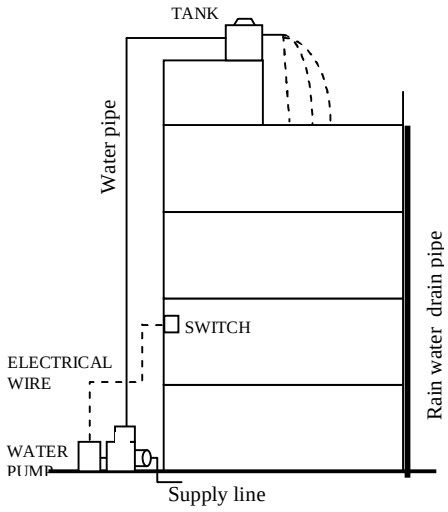

Fig 1 : Overflow through the rain water drain pipe

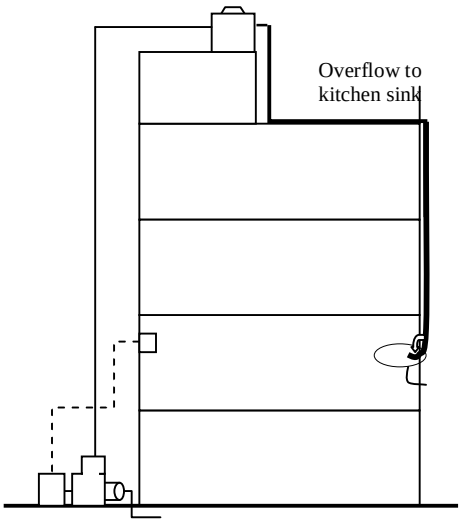

Fig 2 : Overflow through pipe to the kitchen sink

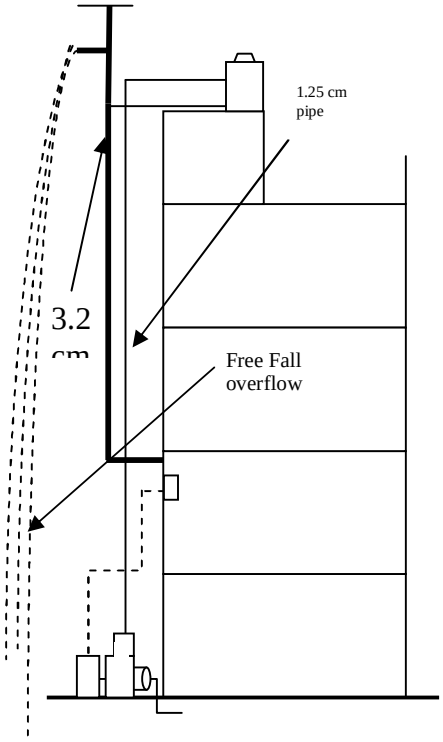

Fig 3 : Freefall overflow

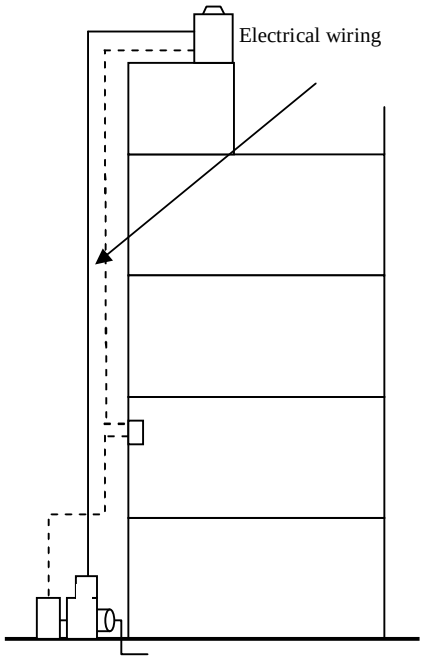

Fig 4 : Alarm circuit connected to storage tank

©IJRASET (UGC Approved Journal): All Rights are Reserved

Audit of roof top water storage installations showing deficient arrangements for knowing tank full condition are pictured above as sketches.

B. Experimental Measurement of Overflow

For this experimental measurement, a household tank of 500 litres kept at the terrace at a height of 22 metres above ground, with a water pump of capacity 0.5 HP on the ground floor was chosen. The pump was switched on and the tank was filled and from the start of overflow, the overflowing water was measured in intervals of time using a measuring flask and a stop watch. The data was recorded and the measured water for each interval was poured into a tub to get the total quantity. The pump was switched off just when the overflow rate became steady (i.e. when the volume of water measured showed a constant value for the same interval,) but the measurement of the overflowing water was continued till the overflow completely stopped to the last drop and the values were tabulated. The data was tabulated and analysed to find the loss of water.

C. Field Survey of Colonies

For this study, a Block of 96 houses in a colony X Block of West Patel Nagar in New Delhi was chosen after a house to house visit with the questionnaire, like water tank capacity, water pump capacity, pumping time in minutes daily, overflow time, number of overflows in a month, any overflow alarm, the data was collected and tabulated. Another survey was conducted in 68 houses of one section of R Block of New Rajinder Nagar, Delhi. Also data from web complaints of water wastage through overflow were also collected for many cities of India.

IV. RESULTS AND DISCUSSIONs

A. Results of Experimental Study and Discussion

From the experimental data of overflow volume and time, discharge rates, q cc/sec(cubic centimetre/second) were arrived by calculating the differential overflow volumes for different time intervals and a graph was drawn for discharge rate q(cc/sec) and time (t, sec) (Figure 5). From the graph, a peak flow rate 58 cc/sec was found out. The experimental measurement of overflow from the start to stop in a typical water storage tank and water pump, has given water loss of 13.8 litres which was confirmed by the volume collected in the bucket. This is the volume of water loss if the pump is stopped immediately after the observation of overflow. The area under the curve in the graph also gives the same volume of water loss i.e. 13.8 litres which is the fixed water loss. This discharge graph has distinctive portions; first a rising curve reaching a peak flow and second a flat horizontal portion which is lag time and third a recession curve where the discharge rate decreases slowly, finally reaching zero. The lag time is the elapsed between the start of full overflow and the time to turn off the pump. A second measurement on the same tank on a different day gave a peak flow of 72 cc/sec and volume of 15.5 litres. So the water loss can vary for various conditions and factors. The volume of water loss can be found out by knowing the area under the discharge curve.

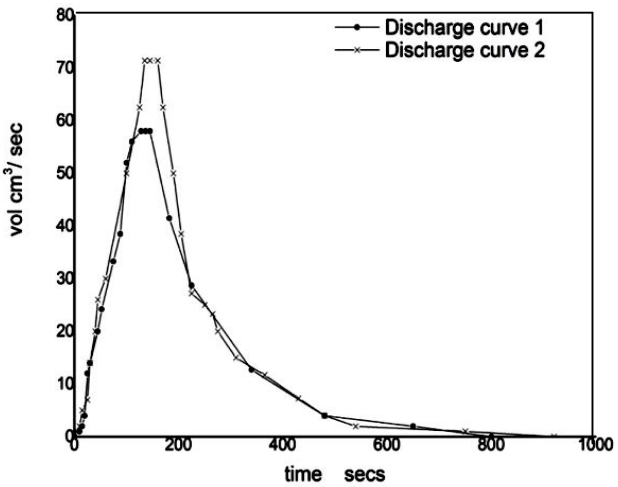

Figure 5. Discharge Vs Time

As there exists vide variation of tank size, pump capacity and different practices and arrangements, the factors affecting the overflow volume were studied. They are as follows:

1) Flow rate at the filling point of supply pipe at the tank.
2) The size, shape and configuration of storage tanks. If two tanks are connected and with one overflow pipe, the rate of increase in water level is slower than for a single tank. The more the surface area of water in the tank, the slower will be the rate of increase in water level.
3) The overflow pipe diameter which varies between 1.25, 1.9, 3.2 cm
4) The delay time (lag time) to turn off the pump after observing overflow.
5) The fixed loss in various stages of overflow.
6) The practices adopted by the individual households in diverting the overflow

The water loss can be significant, if the water flow rate is higher, which will depend on the capacity of water pump and the hydraulic head.

B. Theoretical Analysis of overflow

If a storage tank overflows, it causes water loss from the beginning stages of overflow to the end stages. Water loss by an overflowing tank can be categorised into a fixed water loss and a variable water loss. Fixed water loss varies with many factors, one according to various stages of overflow and pump capacity, and tank and piping factors. Variable water loss, chiefly depend on the lag time to switch off the pump and the flow rate at the inlet pipe to the tank.

The overflow stages are pictorially shown as in Figures 6.

The Figure 6 (a)gives the condition at the time of start of overflow. The water level approaches the bottom of the overflow pipe. Ripples of waves exist at the surface of the water while the water is falling into the tank. These ripples move small quantity of water due to the crescents entering the pipe and so the overflow start as few drops initially.

The rate of increase of level is given with equation,

$$h = \frac{Qin}{A}$$

A= Area of cross section of the water tank). Here for a 500 litre tank of 80 cm height and 90cm diameter and flow rate of 58cc/sec, the rate of increase of level, *h* = 0.0365cm/sec.

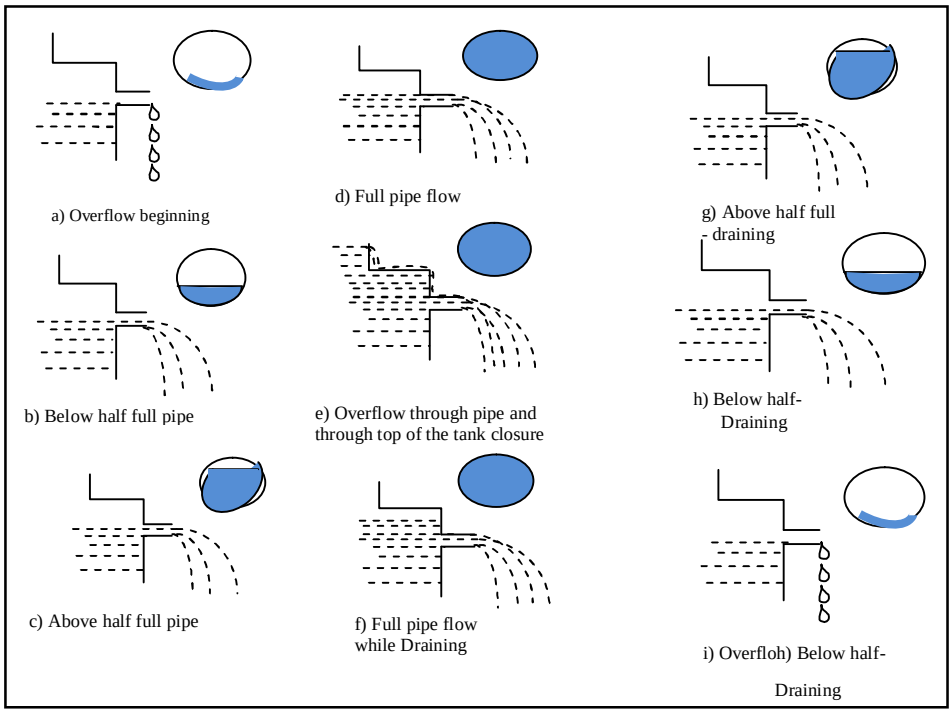

Figure 6: Stages of overflow

©IJRASET (UGC Approved Journal): All Rights are Reserved

Figure 6(b) shows the condition when the level of the tank increases and the water starts flowing through the overflow pipe just like a partially flowing pipe for condition that the depth is below the half mark of pipe diameter.

But as the depth of water increases quickly and is varying without a steady state Bernoulli equation or Manning equation cannot be applied to find quantity of water flowing at this condition. But the quantity water loss can be assumed to be the same as arrived for above the half mark of overflow pipe.

Figure 6(c) shows the condition when the level of water is above the half mark of overflow pipe, so flow rate is calculated using

$$q = 0.9 * a * \sqrt{2gh}$$

When h = 0.4 cm, the flow rate is 19.5 cc/sec. which result in a water loss of 1.5 litres in 80 sec.

Figure 6(d) is the stage when overflow is through the full pipe and the flow rate through this overflow pipe is

$$q = 0.88 * a * \sqrt{2ghx}$$

where a = cross section of the overflow pipe which works out to be 58 cc/sec (3.5 L/min) and if the pump is turned off at this stage the water loss will be 5 litres.

Figure 6(e) shows the stage when the overflow reaches the top and overflow from the top also along with the overflow through the overflow pipe. This water loss is 90 sec * 3.5 cc/sec = 315 cc plus the water loss through pipe which is 5.3 litres.

Figure 6.f, g, h represent the draining stages after the pump is turned off.

The water loss in these stages is calculated using the graph in Figure 5, as area under declining side which is 8.5 litres. The water will completely stop overflowing only when the level in the tank is below the overflow pipe. So the fixed water loss by calculation also gives the same water loss of 13.8 litres for the experimental condition for the flow rate of 3.5 L/min.

Water loss vary according to the flowrate of the into the storage tank. For a higher flow rate of 15 L/min., the fixed water loss will be 3 times higher and then it will be (13.8x3) approximately 40 litres per overflow.

C. Results of household survey and Discussion

From the conducted field survey in West Patel Nagar, it was observed that; out of 80 houses that responded, 64 households had accepted that their tanks overflow for 10, 20, 30 minutes duration. Again 11 houses had alarm indication for knowing the tank full condition. No house had Automatic controllers in their tank installations.

TABLE 1
Overflow Duration Vs Number of Households

Overflow Duration In Minutes	Number of households	Cumulative
10	19	19
20	43	62
30	2	64
0	16	80

©IJRASET (UGC Approved Journal): All Rights are Reserved

TABLE 2
Frequency of overflow in a month Vs Number of households

Frequency of overflow in a month	Number of Households	Cumulative
15	2	2
10	5	7
6	2	9
5	3	12
4	12	24
3	19	43
2	21	64

The data of the conducted survey is categorized into number of households with the frequency of overflow in a month in Table 2 and number households with the duration of overflow in Tables 1. It was observed that 80 % of household storage tanks had overflow for long duration, 23.75% had 10 minute overflow, 53.75% had 20 minute overflow duration and 2.5% had 30 minute overflow duration. Estimation of variable water loss was done by knowing the time duration of overflow, peak flow rate and frequency of overflows. In this way, the total volume of water loss by all these 64 houses together comes around 45kl in a month.

From the survey data, the total overflow time of 73.25 hours in a month is arrived, and a water loss estimated by this method comes to a maximum of 44 kl in a month. A fixed water loss also must be added to the above variable water loss. Through the 254 number of overflows from the survey, water loss of 30 kl in a month. If the flow rate is 3.5 L/min then the water loss is 15.4 kl in a month and if the flow rate is 10 L/min, then the water loss is 44 kl for a month to this colony. Another addition to the water loss is by the houses who have arranged diverting means.

From the survey it is observed that 8 households out of the 80 have the arrangement of diverting the overflowing water to the kitchen sink. The water wastage will be additional column length of water of the return pipe as in Figure 2. This additional water column is the pipe connecting the tank to the kitchen sink, which is 5 litres, will be lost. This water loss occurs every time the tank is filled. In a day, if the tank is filled for two times, the water loss will be 300 litres per month in worst case, and so water loss in this block under this category will be 2.4 kl per month. So adding all the losses, it comes to 90 kl per month of wasted water in overflow, estimated to be 7% of the water supplied.

The energy loss is calculated from the total hours 73.25 hrs of pump run which was arrived by using the total minutes of overflow. Then the total energy used in the pump run in overflow was 80kW-hr. monthly in this colony. With total of 1152 kW-h of energy usage estimated for these 64 houses with 60 minutes of daily pump run in this colony for a month, the percentage energy wasted on pumping to overflow, works out to be 3.84 % of the energy used for pumping.

1) *Results and Discussion on Household Survey of another Colony:* From another survey conducted in 68 houses of one section of R Block of New Rajinder Nagar, Delhi, the data are tabulated in Table 3. From the data, 20.6% of household accepted that they have 10 minute overflow. 3% of have accepted that they have 20 minute overflow. 76% of households did not reveal the overflow times in a month. 35% percentage of houses having number of overflows ranging from 2 to 15 times in a month. Not mentioned:52 houses, Overflow alarm fixed - 62 Yes, 5 No. Tube-well augmented supply houses are 6 Nos. and they had more

©IJRASET (UGC Approved Journal): All Rights are Reserved

than 30 min overflow 2-4 times a month when they operated the tube wells. Total number of overflows in a month in this colony from survey is 169 from 35% of houses. The fixed water loss from these overflows varies from 2.4 to 11kl in a month. Variable water loss of 5.3 kl to 15.2 kl was arrived by calculating the hours of overflow, i.e. 25.35 hours in a month in this block. And the total water loss in a month varied between 7.7 kl to 26.2 kl in this block of 68 houses which is equal to 2% of the water supplied.

TABLE 3
Frequency of overflows Vs Number of Households-Rajinder Nagar, Delhi

Frequency of overflow in a month	Number of Households	Percentage
15	2	3
12	2	3
10	8	12
5	2	3
4	2	3
3	3	4.5
2	4	6
0	15	22

The energy loss is calculated from the time used by the pump in overflow hours which is 25.35x1.1kW=28kW-hr in a month. 6 Houses are using ground water with tube-wells for augmenting the supply of water. These pumps were left running for 30 minutes 2-4 times in a month, leaving the tanks overflowing with water loss of 14.4 kl in a month adding to 41 kl of water loss and an energy loss of 13.4 kW-hr adding to a total energy loss of 41 kW-hr in a month from these 68 houses which works out to 1.8 % of the energy consumption that is lost in overflow.

D. Discussion on the Discrepancies observed on Visual Audit of installations

The audit of the water storage infrastructure of the households has brought to light that water wasting practices and arrangements are followed by individuals to know the tank filled condition due to deficient devices. Ironically, allowing the tank to overflow is one major practice to know the tank full condition.

1) Diverting Overflow Water onto Terrace. A hard /flexible pipe is attached to the overflow pipe and brought down to the terrace so that the overflow will be silently drained onto the terrace and is finally discharged into drain as in Figure 1. Pump is switched off based on experience. Water loss in this case will be unnoticed and unpredictable but can be huge.

2) Diverting of overflow onto rain drain pipe of Terrace. The overflow pipe is left open on the terrace and the water that overflows falls on terrace and discharged through the rain water drain. Pump is switched of on observing the overflow. Water loss in this case also will be huge and unnoticed.

3) Fixing Alarm for Level in Tank. An alarm circuit are connected to sound an alarm when the tank is filled as in Figure 4. These overflow alarms are installed by an electrician, by fixing the alarm switch near the switch of the pump in kitchen and running a pair of wires from the top of the tank with tips open inside the top of the tank. When the tips touch water at the highest level, the circuit makes an alarm and the pump can be turned off. But the tips get eroded quickly and the alarms fail leading to

©IJRASET (UGC Approved Journal): All Rights are Reserved

overflow and water loss. If the alarm is not operating properly, then the water loss will be same as case may as per Figure 1, 2. The water loss can be worst if the alarm fails.

4) Separate switches are provided for water pump and alarm. The alarm circuit is connected to a separate circuit switch and pump is operated through another switch by the electricians; so the pump and alarm switches are to be simultaneously turned on. But if the alarm is not switched on, as it happens due to human error, alarm will not sound even after the tank is full and the tank will be overflowing for a long time, wasting water and electricity. The water and energy loss in this case is unpredictable but is to be often very high.
5) Diverting overflow water into sewage vent pipe. The overflow water is diverted and drained through the sewer vent pipe. Pump is switched off by experience. The overflow is not noticed and so the lag time to switch off the pump is unpredictable and water and energy loss can be huge.
6) Diverting overflow water onto the Ground. The overflow water fall on the ground directly as Figure 3.Water pump is switched off by hearing the sound of overflow water by the individual. The water loss will be fixed a water loss and an additional water loss proportional to the lag time to turn off the pump.
7) Diverting Overflow onto Kitchen Sink. The overflow pipe is extended to the kitchen sink as shown in Figure 2, so that pump can be turned off on observing the overflow water falling into their sink. Water loss in this case will be a fixed water loss and an additional column of water pipe from tank to the kitchen.
8) Sometimes with the normal working alarm, the individual goes for some other work or sleep and the alarm continues to ring but no one is around to attend to stop the pump, and this overflow continues for long time (hours) wasting precious water and energy.

So if we take the city of Delhi with 21.6 lakh connections, the alarm failure can be disastrously wasting water and energy resources to the tune of 15 million litres in a month. With probability of 2% of such colonies, the water loss will be 3000 million litres in a month. Impact on water utilities can be realised if we calculate overall water loss for entire India. Using the data from census 2011, number of urban households in India is 80329751 and rural 168078743[census 2011]. The households with tap connections and tube-well are 637 lakh households and total water loss in entire India will be 90 billion litres in a month with an equivalent energy loss i.e. 90 billion kW-h in a month.

E. Discussion on finding a Solution

Automatic system to turn off the pump when the water reach the tank full condition, will only be fail proof to stop water loss. Adding a capacitive level sensor will help to know real time tank level and consumption of water which will help the user to be aware of any water loss. A capacitive sensor of tank inflow water will help in calculating the flow rate into the tank and also will help to sense when supply water is stopped or no water in the pipe. Incorporating these sensors and microcontroller will help to increase efficiency of water and energy and prevent water loss. A cheaper reliable and robust device is needed for controlling the water level of the tank, by having a float switch to automatically cut off the power supply.

For this a float switch is fixed at the tank top at the overflow pipe. The two wires are brought to the control box. The control box is fixed with a relay (7A, 12V) to switch off the pump. It can be mounted directly through the top of tank, reaching to the top level. A capacitive sensor sensing the water level actuates a relay switch.

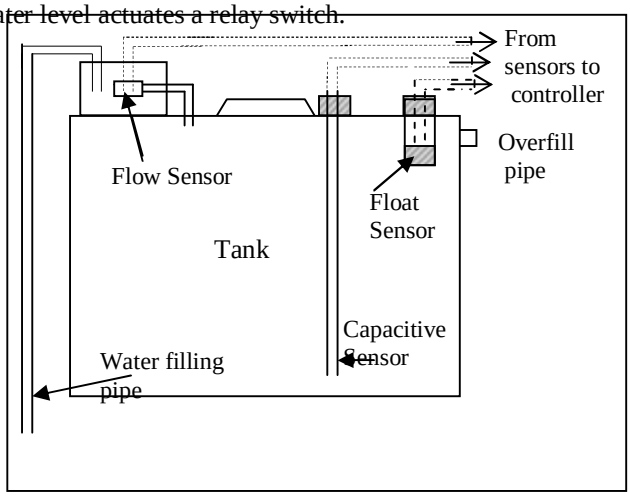

Fig. 7. Box diagram of Tank fitted with sensors

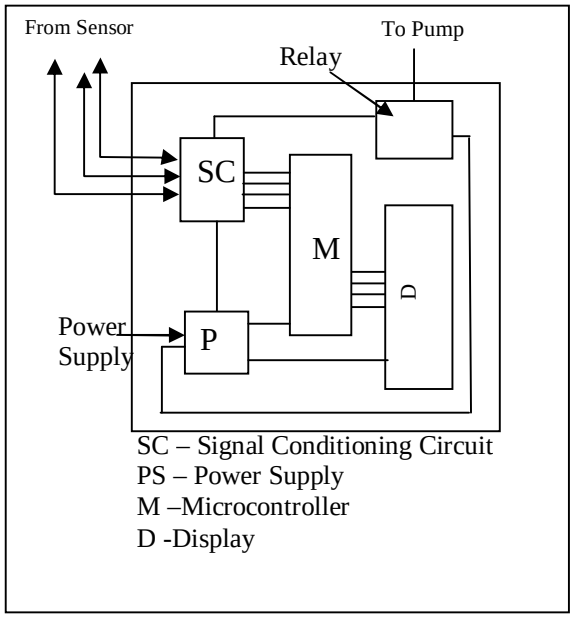

Fig. 8. Box Diagram of Controller

The other sensors to be added are given in Figure 7. A capacitive sensor with concentric pipe electrodes for level of the tank, and a capacitive sensor at the inflow side fitted on the weir pipe to know the flow rates as well as no flow indicator, both are connected to the control panel with microcontroller, relay, other control circuits and a display and alarm system. The microcontroller is programmed to display the level of tank any time, the consumption of water round the clock. It also will calculate the water pumped daily, and calculate the water use efficiency. A policy intervention is needed to conserve the water and energy resource; by insisting every household to install this controller and it must be mandated through regulation.

For this a float switch is fixed at the tank top at the overflow pipe. The two wires are brought to the control box. The control box is fixed with a relay (7A, 12V) to switch off the pump. It can be mounted directly through the top of tank, reaching to the top level. A capacitive sensor sensing the water level actuates a relay switch.

The other sensors to be added are given in Figure 7. A capacitive sensor with concentric pipe electrodes for level of the tank, and a capacitive sensor at the inflow side fitted on the weir pipe to know the flow rates as well as no flow indicator, both are connected to the control panel with microcontroller, relay, other control circuits and a display and alarm system. The microcontroller is programmed to display the level of tank any time, the consumption of water round the clock. It also will calculate the water pumped daily, and calculate the water use efficiency.

A policy intervention is needed to conserve the water and energy resource; by insisting every household to install this controller and it must be mandated through regulation.

V. CONCLUSIONS

Visual audit has brought into light the existence of many Deficient arrangements and practices for knowing the tank full condition in the existing installations of the roof top water storage tanks. The consumers resort to deficient arrangements due to non- availability of standard, reliable devices, sensors and controllers. Huge water and energy losses that occur due to overflow are estimated using the different techniques point to the urgent need to implement smart controller. The capacitance sensors and the float sensors integrated into a robust, smart controller if implemented will remove deficiencies. In conclusion, standard controlling mechanism for switching off the water pumps has to be implemented on every installation of roof top water storage tank. This must be made compulsory through policy intervention by the government by widespread awareness and insisting on the users to install these controllers in their installations.

REFERENCES

[1] ADB Asian Development Bank: 2007 Benchmarking and Data Book of Water Utilities in India, 2007, p.3..
[2] ADB Asian Development Bank: 2012, Good Practices in Urban Water Management; Decoding good practices for a successful future. Mandluyong City, Philippines.

©IJRASET (UGC Approved Journal): All Rights are Reserved

[3] Ricardo Cobacho et al, 2008, Private water storage tanks: evaluating their inefficiencies, Water Practice & Technology © IWA Publishing, 2008 | doi:10.2166/wpt.2008.025.
[4] GOI (2010):Service Level Benchmarking Data Book Improving Service Outcomes 2008-09, Government of India, ministry of Urban Development New Delhi.
[5] Indian Express, April 2010, http://archive.indianexpress.com/story-print/491881/
[6] THE HINDU, April 2010, http://www.thehindu.com/todays-paper/tp-national/tp-newdelhi/Now-penalties-on-consumers-for-overflowing-tanks/article16020198.ece
[7] THE HINDU, FEBRUARY,2010, http://www.thehindu.com/todays-paper/tp-national/tp-newdelhi/Over-a-dozen-fined-for-misuse-of-water/article15977605.ece
[8] Consumer complaints DJB; https://www.consumercomplaints.in/complaints/delhi-jal-board-delhi-east-delhi-delhi-c416909.html
[9] Indian Consumer Complaints Forum,2017:. https://www.consumercomplaints.in/complaints/water-wastage-maharashtra-c618766.html
[10] Chandigar Municipal Corporation, ,2017: http://www.hindustantimes.com/punjab/chandigarh-water-wastage-a-routine-summer-ban-notwithstanding/story-ujaga5ZpzQiMrL9ogNlqMI.html
[11] TheTribune, April30,2016, http://www.tribuneindia.com/news/pujab/now-pay-finefor-wastingwater/229816.html.
[12] Gupta Akhilesh, Mall R.K., Singh Ranjeet, Rathore L. S., Singh R. S., Water resources and climate change: An Indian Perspective; Current Science, VOL. 90, NO. 12, June 2006.
[13] Hindustan Times, Feb17,2016, https://www.hindustantimes.com/delhi-news/why-delhi-can-never-be-self-reliant-in-water/story-m0GjHufZsb7ptYRmrW12cI.html
[14] Census 2011;www.censusindia.gov.in/Census_And_You/availability_of_eminities_and_assets.aspk

©IJRASET (UGC Approved Journal): All Rights are Reserved

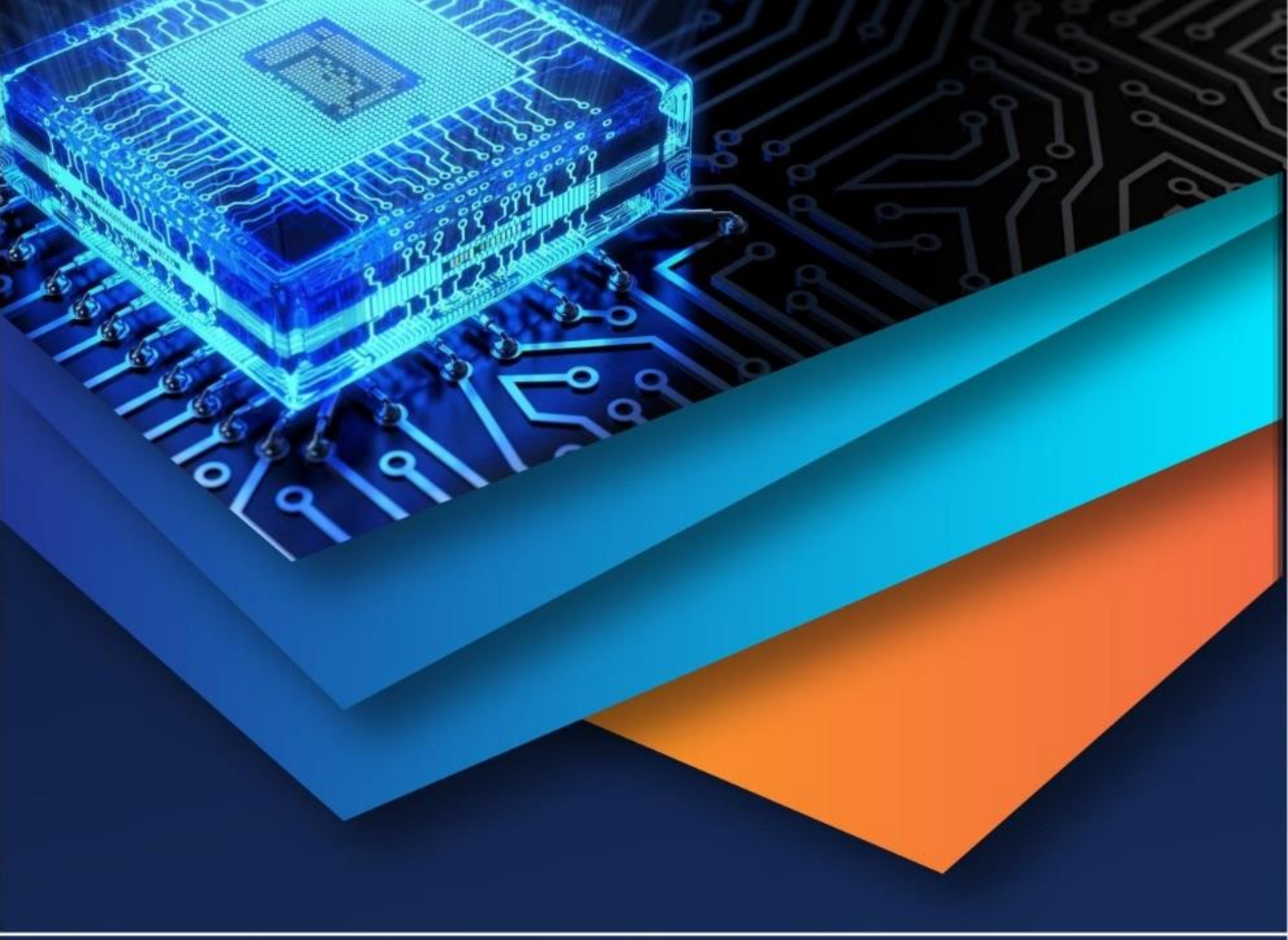

10.22214/IJRASET

45.98

IMPACT FACTOR: 7.129

IMPACT FACTOR: 7.429

INTERNATIONAL JOURNAL FOR RESEARCH

IN APPLIED SCIENCE & ENGINEERING TECHNOLOGY

Call : 08813907089 (24*7 Support on Whatsapp)