iJRASET
International Journal For Research in Applied Science and Engineering Technology

INTERNATIONAL JOURNAL FOR RESEARCH

IN APPLIED SCIENCE & ENGINEERING TECHNOLOGY

Volume: 6 **Issue:** IV **Month of publication:** April 2018

DOI: http://doi.org/10.22214/ijraset.2018.4230

www.ijraset.com

Call: 08813907089 | E-mail ID: ijraset@gmail.com

International Journal for Research in Applied Science & Engineering Technology (IJRASET)
ISSN: 2321-9653; IC Value: 45.98; SJ Impact Factor: 6.887
Volume 6 Issue IV, April 2018- Available at www.ijraset.com

Implementation of Autonomous Vehicle Technology using Renewable Source

P. Malarvizhi[1], S. Janani[2], Samuel Ciril[3], S. Subalakshmi[4], M. Thirumurugan[5]
[1] Assistant Professor, Department of Electrical and Electronics Engineering, Sree Sakthi Engineering College, Coimbatore.
[2, 3, 4, 5] U.G Scholars, Department of Electrical and Electronics Engineering, Sree Sakthi Engineering College, Coimbatore.

Abstract*: The fuel demand is pinnacle, this can be tackled by electric origin. A renewable source for electric energy is making elegant adaptation in this trendy globe. In forth coming days renewable electric source will be a lofty revolution and it also aids the society. The utility of renewable energy with self-driving technology will be a progressive novelty & Eco friendly. The competence of e-car is in hike, when paired to the fuel car. The smog is enhancing a drastical issue in this universe, and it has a impact over the sustenance, but it can be winced by this project.

Keywords: Renewable Source, Self Driving Vehicle (SDV), GPS, Obstacle Sensor, DC motor, Battery, RERT-Renewable Electric Robot Taxi.

I. INTRODUCTION

The motorized vehicle makes our life sophisticated and provides tremendous development. Vehicle capabilities are expanded by recent technologies and as a result self-driving has emerged. The aim of this technology is to reduce the human interventions or driving burden and to provide luxurious life. There is a huge difference between the human driving and complete automation process. The standard of robotics activity or automatic process is highly efficient than that of conventional vehicles. Increased sensing capability of sensors makes the role of SDV more efficient.

Self-driving vehicle faces more consequences against its limitations. Those drawbacks can be overcomes by the best design methodology .This evolving technology utilizes GPS-Global Positioning System for automatic navigation by monitoring and surveillance. IR-infrared sensor is used for obstacle detection process. The controllers contribution has made the innovation dramatically classes.

II. LITERATURE SURVEY

The fully automated vehicle research is started in 1930's and yet to be completed. Various concerns are in a track of developing SDV technology and also preferring renewable sources. Among them google cars has developed SDV based on driving ideology [1]. Here one vehicle will reach the destination and other which follows the front vehicle will run without any human intervention. The driver can relax during traffic times. The tool of SDV is an embedded system so that it operates automatically [2]. This taxi utilizes various vehicle versatile technologies for its better performance during transportation [2]. SDV innovation ethically aids the social justice [2]. This automation vehicle detects the obstacles in road ways and human beings by LED indications, this feedback signal will adapt the situation [3]. In earlier development stage this technology were assisting the driving process with the help of parking sensors, reversing camera and various firmware. Obstacle detection requires high priority and this is highly concentrated in the SDV design. The obstacle detection and localization in the global surface were done by the stixel and point clustering method [5].

Even if the vehicle is far from the obstacles the SDV's object examining efficiency will not drop [5]. This detection is done by collecting Samples from the obstacles [5]. In order to detect the signal in the SDV system 2D LIDAR-Light Detection and Ranger is used, this gathers information about Cartesian and polar localized obstacles [3].

III. IMPLEMENTATION METHODOLOGY

The availability of the renewable source is tremendous, and this causes null pollution to the security. In recent days the society shows more interest in adopting renewable energy source, and this usage will be spread rapidly worldwide. Robot taxi is being a most innovative invention artificial intelligence building race, and this feds energy from renewable source (solar) grid and does the computerized process. Despite of human intervention, the automation methodology is evolved in this undertaken work in order to operate automatically. Controllers and obstacle detection sensor abides latitude and longitude data's from satellite and it feeds to the controller. The GPS module used here is GPS L80, it has a very good performance in tracking and it supports the automatic antenna switching functions. Here IR sensor acts as an obstacle detector, it consists of transmitter and receiver. The IR transmitter is nothing

©IJRASET (UGC Approved Journal): All Rights are Reserved

but the IR led and these rays are invisible to naked eyes.IR receiver is nothing but the IR photodiode and it receives only the rays. Both GPS device and IR sensor keeps on transmitting data's to the controller and then the controller controls the motoring action of the car.

IV. DESIGN OF AUTONOMOUS DRIVING TECHNOLOGY

The renewable source of solar energy is utilized as an input to the battery. The solar panel transmits the light energy from the solar rays into electrical energy with the help of photovoltaic cells. The four DC motors are employed for the wheel movement of the SDV. The motors are given power with the help of this 12V battery. Two wheels are deployed in front ends and other two wheels are at back ends.

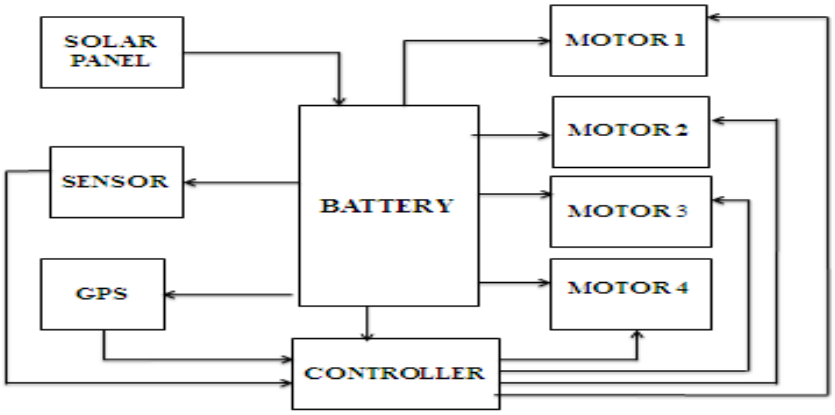

Fig.1.Block Diagram of Autonomous Driving Technology

The power is given to the GPS through the power supply. GPS is interfaced with 16F877A. The GPS-L80 gathers the latitude longitude signal from the satellite and fetches the particulars to PIC. The IR sensors are used as an obstacle sensor and they are faster to PIC controller. When there is an obstacle in front of the SDV, it generates the signal and addresses these data's to the PIC. The controller makes the relay to disclose and the power to motor is absent. When the obstacle gets abscond, the relay closes and the power to the motor is given again so the motor runs and the wheel is driven. The controlling action is done by the PIC 16F877A, the obstacle detection is accomplished by IR sensors and satellite data's are acquired and communicated to PIC by GPS module. The power to these modules and the motors were afford by 12V battery. The battery is prolonged charged by the solar panel through solar rays during the day time.

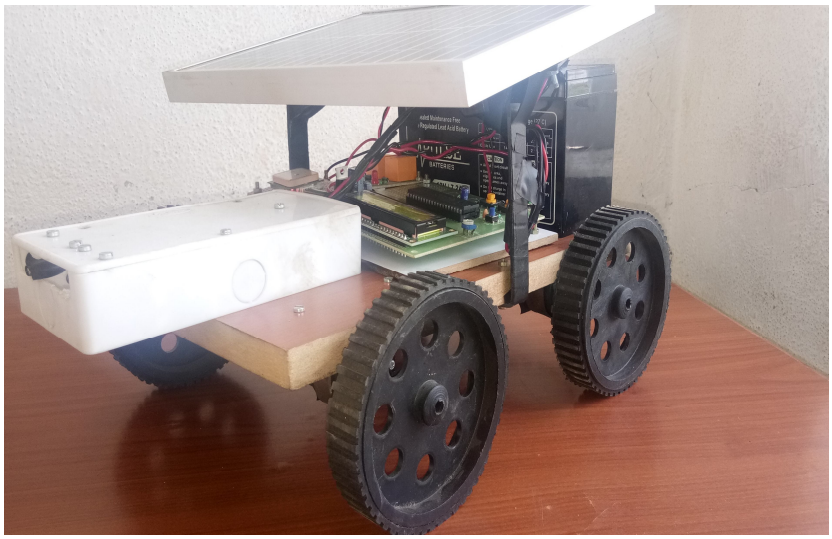

Fig. 2. Model of Autonomous Driving Vehicle

©IJRASET (UGC Approved Journal): All Rights are Reserved

V. DESIGN AND MODELING OF COMPONENTS

A. Obstacle Sensor

The IR sensors are used as an obstacle detector, the IR addresses a wide variety of wireless applications. The IR sensor emits and detects infra-red radiation to sense it surrounding. The basic concept of an IR sensor used as a obstacle detector is to transmit an IR signal. This IR signal bounces from the surface of an object and the signal is received at IR receiver. In the electromagnetic spectrum, the IR protection is divided into 3 regions.

1) Nearer region - 700nm to 1400nm
2) Mid region – 1400nm to 3000nm
3) Far region – 3000nm to 1mm

The IR sensor is placed at the front of the SDV. Supply is given through the 12V battery. The IR transmitter emits the IR radiations, these rays reaches the obstacle and some of the radiation reflects back to the IR receiver. Based on the intensity of the reception by IR receiver, the output of the sensor is defined. The transmitter and receiver placed at both ends. The surface of the obstacle is classified into two types (i)reflective(ii)non-reflective.If the surface of obstacle is reflective either white or other light colours , most of the rays were reflected back and reaches the photo diode. If the surface f the obstacle is non-reflective either black or other dark colour. When no rays are reflected back (ie) the resistance of photo diode remains higher it means there is no obstacle. The position of IR sensor is important, for proper detection it must be placed by 45^0. In order to avoid other reflections rather than the obstacle the IR must be enclosed properly by plastic.

B. Solar Panel

The majority of modules use wafer-based crystalline silicon cells or thin-film cells. The structural (load carrying) member of a module can either be the top layer or the back layer. Cells must also be protected from mechanical damage and moisture. Most modules are rigid, but semi-flexible ones based on thin-film cells are also available. The cells must be connected electrically in series, one to another. Externally most of photovoltaic modules use MC4 connectors types to facilitate easy weatherproof connections to the rest of the system . The electrical connections are made in series to achieve a desired output voltage or in parallel to provide a desired current capability. The conductors may contain silver, copper or other non-magnetic conductive transition metals. Bypass diodes may be incorporated or placed externally. In case of partial module shading, to maximize the output of module sections still illuminated. Solar irradiation and ambient temperature are the main parameters of the PV panel.

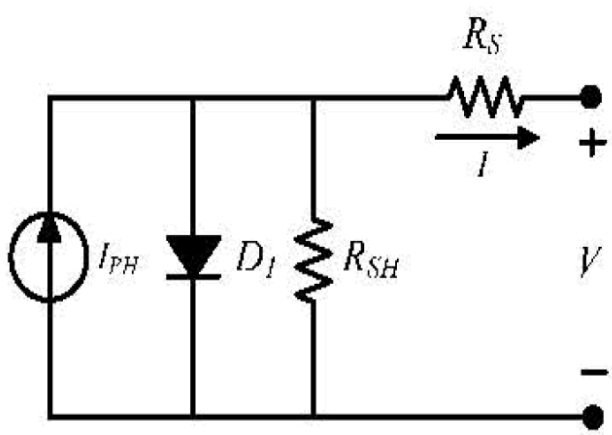

Fig.3.Equivalent Circuit of a Solar Cell

$$I_{pv} = I_{ph} - I_0 - \left\{exp\left(\frac{V_{pv}+IR_s}{AV_t}\right) - 1\right\} - \left(\frac{V_{pv}+IR_s}{R_p}\right)$$

$$I_{ph} = \frac{s}{1000}\left[I_{ref} + K_i(T - T_{ref})\right]$$

$$I_0 = I_{rs}\left(\frac{T}{T_{ref}}\right)^3 exp\left[\frac{q.E_g}{A.K}\left(\frac{1}{T_{ref}} - \frac{1}{T}\right)\right]$$

I_{pv} - Output current of the solar cell

V_{pv} - Output voltage of the solar cell

I_{ph} - Light generated current

R_s - Series resistance of the cell

R_p - Parallel resistance of the cell

I_0 - Diode saturation current

K_i - Temperature coefficient of cell

V_t - Thermal voltage

I_{ref} - Short circuit current

T_{ref} – Reference temperature

I_{rs} - Reverse saturation current

E_g - Semiconductors band gap energy

K - Boltzmann constant

T - Operating temperature

C. GPS Module

The GPS module containing 22 tracking/66 acquisition channel receiver. The receiver type L80 frequency band of code is used and also the navigation data update is 1Hz. The module operating temperature is -40 to +85 deg C. Regulated power for the L80 series require for input voltage of 3 to 4.2V and current is not lesser than 150mA.The main application of GPS is location based service(LBS), vehicle navigation system and timing application.

D. PIC micro Controller

The PIC 16F877A is one of the most popular controllers in the industry. The controller is convenient to use and the coding or program of this controller is easier. One of the main advantage is that it can be write-erase as many times as possible because it use flash memory technology. It has 40 pins, but 35 pins are i/o and remaining pins are used for power supply and reset. It is applied in remote sensor, security, safety devices, home automation and in many industrial institution. EEPROM is also featured in it which makes it possible to store some of information permanently. It has two 8 bit and one 10 bit timer. CCP module, serial ports, parallel ports and five i/o ports.it can be used in areas where microcontroller have never been used before as in coprocessor application &timer function.

VI. RESULT

The RERT is the most innovative creation; this is one of the outcomes of modern brilliance. Renewable energy source is overwhelming in our resources and it causes zero pollution to our environment. This RERT is purely build up with renewable source of energy which doesn't contain any polluting agents. This vehicle will not act as a hindrance for the green world. This technology is the combination of solar and autonomous driving technology. Here firmware is used for the automation process, and Successful test drive have made. This crispy innovation will add pleasure to the modernist society and surely the RERT will be an idol for viral craze in this century.

VII. CONCLUSION

Ultra-modern universal race goes with the creative intensions and this project stays as a good model of creativeness. RERT acts a best remedial solution for the smog issues. Accidents due to lack of concentration of the driver is completely abolished because of the installation of sensors and the controllers. This type of automobiles follows a very good traffic discipline. Since the driving process is fully automated a human can travel to unknown or new place with the help of RERT. The major drawback is the failure of the sensor unit, it result in a huge controversy and this impact can be overcome by this highly detecting or active sensational unit. Finally this advanced innovation will exist as an awesome one in this 21st century.

©IJRASET (UGC Approved Journal): All Rights are Reserved

REFERENCES

[1] Memon, Q., Ahmed, M., Ali, S., Memon, A. R., & Shah, W. (2016, November). Self-driving and driver relaxing vehicle. In Robotics and Artificial Intelligence (ICRAI), 2016 2nd International Conference on (pp. 170-174). IEEE.

[2] Blyth, P. L., Mladenovic, M. N., Nardi, B. A., Su, N. M., & Ekbia, H. R. (2015, November). Driving the self-driving vehicle: Expanding the technological design Horizon. In Technology and Society (ISTAS), 2015 IEEE International Symposium on (pp. 1-6). IEEE.

[3] Blyth, P. L., Mladenovic, M. N., Nardi, B. A., Ekbia, H. R., & Su, N. M. (2016). Expanding the design horizon for self-driving vehicles: Distributing benefits and burdens. IEEE Technology and Society Magazine, 35(3), 44-49.

[4] Florentine, E., Andersen, H., Ang, M. A., Pendleton, S. D., Fu, G. M. J., & Ang, M. H. (2015, December). Self-driving vehicle acknowledgement of pedestrian presence conveyed via light-emitting diodes In Humanoid, Nanotechnology, Information Technology, Communication and Control, Environment and Management (HNICEM), 2015 International Conference on(pp. 1-6). IEE.

[5] Pinggera, P., Ramos, S., Gehrig, S., Franke, U., Rother, C., & Mester, R. (2016, October). Lost and found: detecting small road hazards for self-driving vehicles. In Intelligent Robots and Systems (IROS), 2016 IEEE/RSJ International Conference on(pp. 1099-1106). IEEE.

[6] Mladenovic, M. N., & Abbas, M. (2014, November). Priority-based intersection control framework for self-driving vehicles: Agent-based model development and evaluation. In Connected Vehicles and Expo (ICCVE), 2014 International Conference on (pp. 377-384). IEEE.

[7] Karnouskos, S., & Kerschbaum, F. (2018). Privacy and Integrity Considerations in Hyperconnected Autonomous Vehicles. Proceedings of the IEEE, 106(1), 160-170.

[8] Aoki, S., & Rajkumar, R. (2017, April). A merging protocol for self-driving vehicles. In Cyber-Physical Systems (ICCPS), 2017 ACM/IEEE 8th International Conference on (pp. 219-228). IEEE.

[9] Giaimo, F., & Berger, C. (2017, April). Design criteria to architect continuous experimentation for self-driving vehicles. In Software Architecture (ICSA), 2017 IEEE International Conference on (pp. 203-210). IEEE.

[10] Blyth, P. L., & Kosonen, I. (2016, October). Intersecting our mobilities: path dependence from manually-operated semaphore to self-driving vehicles?. In Technology and Society (ISTAS), 2016 IEEE International Symposium on (pp. 1-6). IEEE.

[11] Alheeti, K. M. A., & McDonald-Maier, K. (2016, September). Hybrid intrusion detection in connected self-driving vehicles. In Automation and Computing (ICAC), 2016 22nd International Conference on (pp. 456-461). IEEE.

[12] Anoune, K., Bouya, M., Ghazouani, M., Astito, A., & Abdellah, A. B. (2016, November). Hybrid renewable energy system to maximize the electrical power production. In Renewable and Sustainable Energy Conference (IRSEC), 2016 International (pp. 533-539). IEEE.

[13] Helać, V., & Hanjalić, S. (2017, June). Modeling and the impact on power quality of hybrid solar-wind power plants. In Energy (IYCE), 2017 6th International Youth Conference on (pp. 1-6). IEEE.

©IJRASET (UGC Approved Journal): All Rights are Reserved

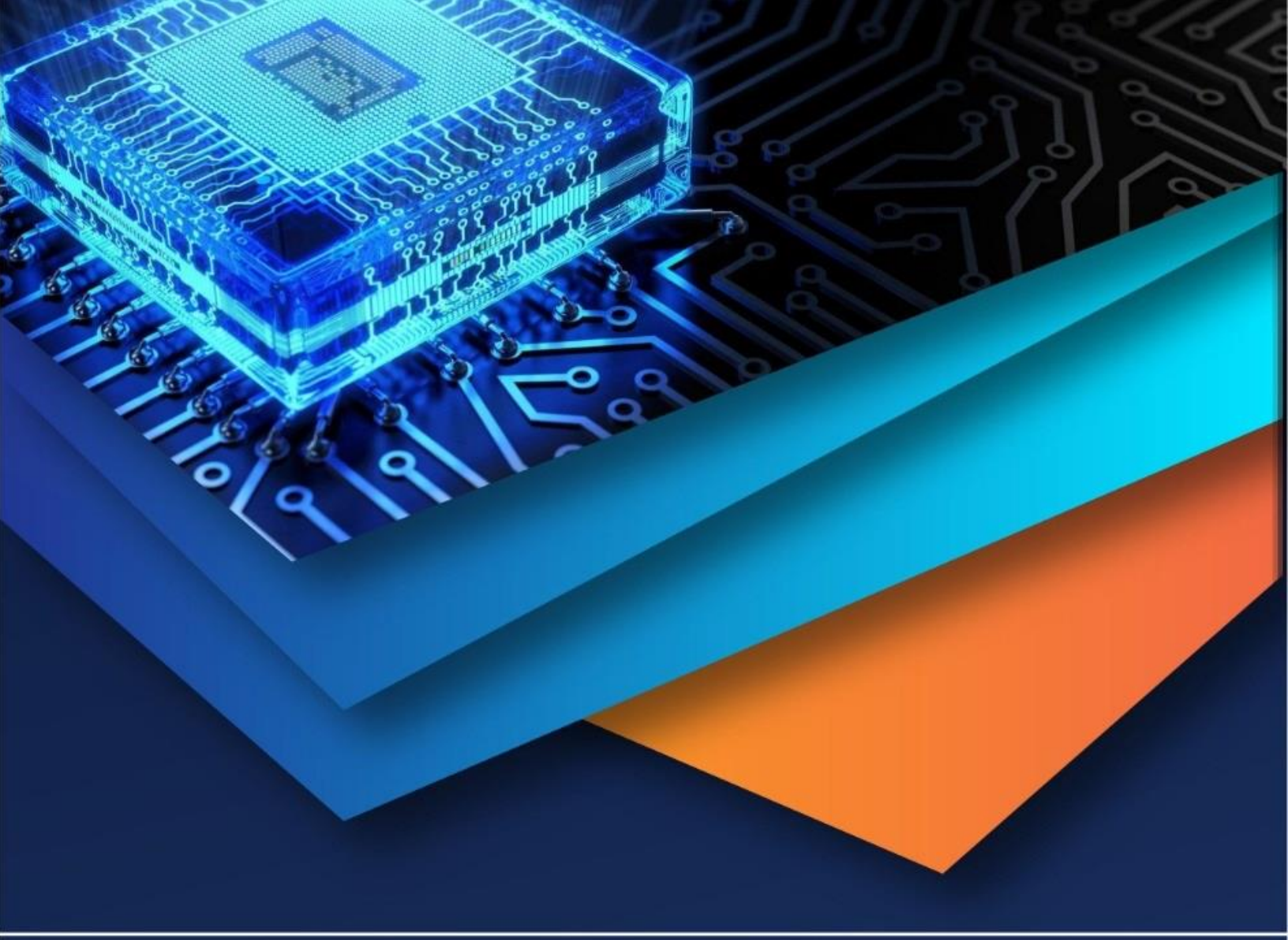

10.22214/IJRASET

45.98

IMPACT FACTOR: 7.129

IMPACT FACTOR: 7.429

INTERNATIONAL JOURNAL FOR RESEARCH

IN APPLIED SCIENCE & ENGINEERING TECHNOLOGY

Call : 08813907089 (24*7 Support on Whatsapp)