iJRASET
International Journal For Research in Applied Science and Engineering Technology

INTERNATIONAL JOURNAL FOR RESEARCH

IN APPLIED SCIENCE & ENGINEERING TECHNOLOGY

Volume: 6 **Issue:** IV **Month of publication:** April 2018

DOI: http://doi.org/10.22214/ijraset.2018.4350

www.ijraset.com

Call: 08813907089 | E-mail ID: ijraset@gmail.com

International Journal for Research in Applied Science & Engineering Technology (IJRASET)
ISSN: 2321-9653; IC Value: 45.98; SJ Impact Factor: 6.887
Volume 6 Issue IV, April 2018- Available at www.ijraset.com

Cosine Phase Angle Function used for Protection of Transmission Line

Siddhesh Hirulkar[1], Ganesh Mandhare[2], Trushali Chaudhari[3], Pushparaj Bawane[4], Minakshi Kalambe[5], Sakshi Sawant[6], Mr. S.K. Mude[7], Mr. A.S. Nikhade[8]
[1, 2, 3, 4, 5, 6]*Student, Department Of Electrical Engineering, RTM Nagpur University*
[7, 8]*Prof, Department Of Electrical Engineering, RTM Nagpur University*

Abstract: ***In this paper different types of fault are studied on the transmission line . For the protection of the transmission line different types of methods are used such as differential protection scheme using phase domain, phase angle comparison method and cosine phase angle methods etc. Differential protection scheme compares the magnitude of both end of current and detect the error as the magnitude of current is been considered so the accuracy of the scheme may get affected .In this paper we proposed the cosine function algorithm which improves the phase comparison and compensate the error due to the line charging current .In this method we consider the angle of both the end current and using cosine function the angle is been calculated and it is compared with the threshold value set in the relay. In this way it improve the sensitivity, selectivity & simplicity of the system.***
Keywords: Phase comparison, π model of transmission line, line protection, differential relay, synchronized measurements.

I. INTRODUCTION

The conventional scheme are been used to compensate the error due to the line charging current such as the differential protection scheme ,differential phase angle comparison scheme, phase angle comparison using cosine function etc. Differential protection method is used widely for the protection of the transmission line. In this method the magnitude of both end current is calculated and the error is compensated[3]. But the cosine phase angle comparison works on the comparison of the phase angle of both the end current of the transmission line to distinguish external and internal faults. Furthermore, in the secure phase comparison method on the sum of angle is calculated and compared with the threshold value and thus the relay will operate accordingly. The fault in the transmission line may be LLLG, LL, LG, LLL etc.[4]. Both the scheme works for each type of fault. The transmission line parameters are capacitor, inductor, resistor. When we are calculating the angle the current should be series current. In the transmission line the capacitor current is calculated and to get the series current the capacitor current is subtracted from the line charging current This scheme works on the phase angle comparison of both the end current and after calculating the angle the cosine function is applied to it and the summation of angle is calculated. Thus the cos invers of angle is done and this angle is compared with the threshold value set in the relay. And thus the relay will give the signal to the circuit breaker and the system will break if there is any fault in the system or it will continue to work. This scheme works only for internal fault that is within its area of protection zone. When the fault will occur in the external area the circuit will not trip. The proposed schemes consider time-synchronised measurementsof voltages and currents from both ends of the transmission line. The improved phase comparison technique, which compensates the phase-angle error due to line-charging currents and a function of the cosine scheme is proposed using the equivalent- model of the transmission line[3]. The schemes are able to discriminate the faulty phase reliably and significantly improves the speed of relaying without sacrificing security. The performance of the schemes is evaluated on a stable and unstablepower swing. The effect of CT saturation on present schemes is simulated and presented in the case study. Simulation studiesinclude all symmetrical and asymmetrical faults with a change in fault resistance. Fault location and fault inception time are performed to prove the reliability of the proposed schemes. In this paper the conventional methods, such as segregated phase comparison, positive-sequence component comparison, and mixed-mode comparison are discussed. Compensation of phase-angle error due to line charging currents for conventional methods is also proposed. The improved phase comparison, which compensates the phase angle error due to line-charging currents in the phase domainand a novel function of cosine techniques.

II. FUNDAMENTALS

A. Fault Detection and Classification

Fig. 1 represents an equivalent -model of the transmission line to represent the effect of distributed line parameters between the line terminals at the fundamental frequency. Line currents and series branch currents are represented with conventional notations. This

©IJRASET (UGC Approved Journal): All Rights are Reserved

section explores conventional segregated phase comparison, positive-sequence component comparison, and mixed-mode comparison schemes [2]. With the advent of time-synchronized measurements, the improved phase comparison technique, which compensates the phase-angle error due to line-charging currents and a novel function of cosine methods, is presented.

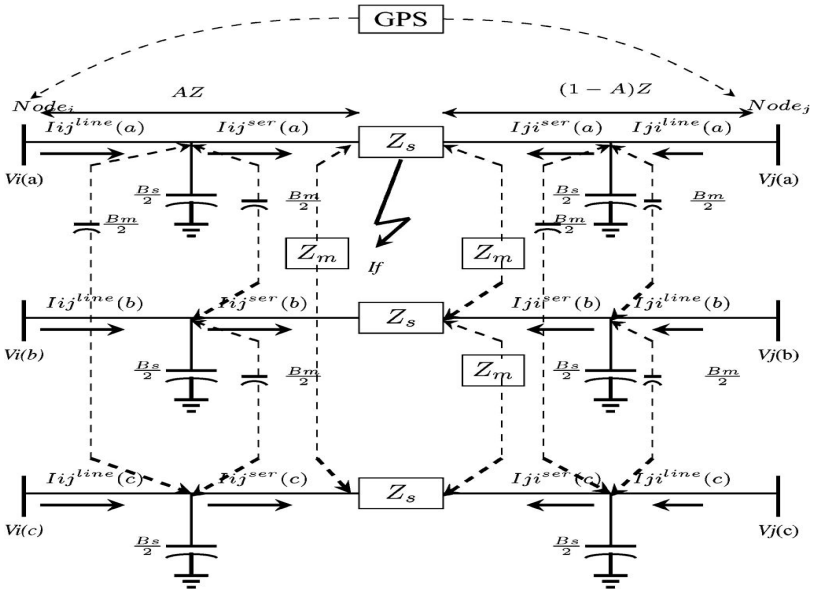

Fig. 1 GPS synchronised phase comparison scheme with the equivalent π-model of the three-phase transposed transmission line.

B. Phase comparison scheme

In this scheme the line current from both the end i.e, 'Iij' from one end and 'Iji' from another end is calculated then the angle of each end current is calculated. The angle should be equal to 180 then the circuit breaker will not trip.If there is internal fault the angle calculated will vary and it will not be equal to 180. Thus the relay will send the signal to the circuit breaker and the CB will trip and the system will break. The tripping region varies from +180 to -180 but there may be some difference in the angle it will not perfectly be 180 so the 10 tolerance is set so the tripping region will be as shown below.

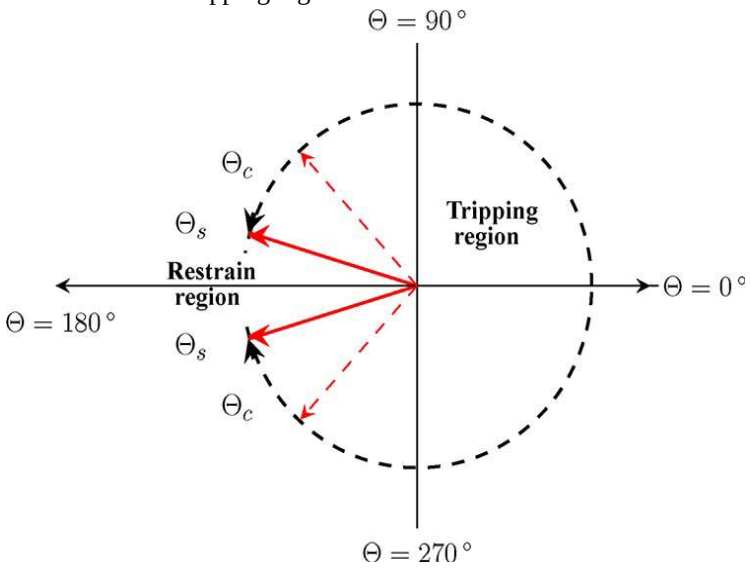

Fig 2: Trip and restrain region in the phase comparison plane

The positive sequence network is excited by both ground and phase faults. Hence, all types of faults can be detected using positive sequence components. But information regarding the faulty phase is not available with this approach. So we prefer the phase domain approach because of its simplicity and accuracy and it has the advantage of having superior ability for faulty phase selection. The flowchart of phase domain approach algorithm are given below.

©IJRASET (UGC Approved Journal): All Rights are Reserved

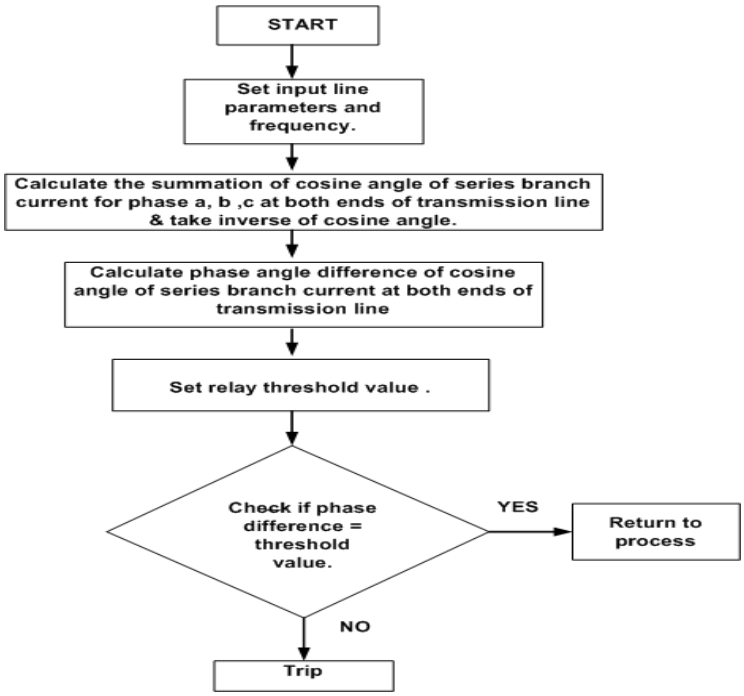

C. Phase comparison technique considering cosine Secure functions

In this method the phase angle is compared using cosine function. The series current is calculated and the angle is measured using cosine function and then it is compared with the threshold value set in the relay [3]. All types of faults are detected using this method. It can distinguish external and internal fault. The relay is set in such manner that it will operate only during internal fault i.e the CB will trip only during internal fault.

Let us consider the equivalent -model of the three-phase transposed line as shown in Fig. 1 where Z_s and Zmrepresent self and mutual series impedance [2]. Assuming time-synchronized measurements at two terminals, that is, and the following scheme is proposed.

Considering the no-fault situation, the line currents and series currents equations at bus i and j for phase "a" can be written as

$$Iij^{ser} = Iij^{line} - Iij^{cap} \quad (1)$$

$$\Psi 1^{ser} = \angle Iij^{ser} - \angle Iji^{ser}$$

$$Iij^{ser} = \frac{Vi - Vj}{Zs} \quad Iji^{ser} = \frac{Vj - Vi}{Zs}$$

$$\arg\left[\frac{Iijser}{Ijiser}\right] = \arg(-1) = 180 \quad (2)$$

$$I_f = Iij^{ser} + Iji^{ser} \quad (3)$$

$$Iijser = \frac{If(1-A)Zs}{Zs}$$

$$Iijser = (Iijser = Ijiser)\ (1\text{-}A)$$

$$Iijser = \frac{(1-A)}{A} Ijiser$$

$$\arg\left[\frac{Iijser}{Ijiser}\right] \neq 180^{\circ} \quad (4)$$

Here, we propose a method which works on the summation of cosine of angle of series branch current Iij^{ser} and Iji^{ser}. For phase "a", in absence of fault, we can write

$$\cos(\angle Iij^{ser}) + \cos(\angle Iji^{ser}) = \cos(\angle Iij^{ser}) + \cos(-180° + \angle Iij^{ser}) = \cos(\angle Iij^{ser}) - \cos(\angle Iji^{ser}) = 0$$

A similar equation can be written for other phases. Hence, no fault condition can be discriminated by a function:-

$\Psi\cos(a) = \cos^{-1}(\cos(\angle Iijser) + \cos(\angle Ijiser) = \cos^{-1}(0) = 90°$

Ideally, $\Psi^{\cos(\text{phase})} = 90°$ will indicate the no fault condition, where phase = a, b, c. However, for internal fault

$\Psi\cos(a)=\cos^{-1}(\cos(\angle Aijser) + \cos(\angle Ajiser) \neq 90°$

Even in the absence of internal fault, the operating point may deviate from 90° due to modelling assumptions and measurement errors.[3] This threshold values ensure that relay is always stable for external faults without affecting its performance on internal faults. Fig. shows trip and restrain region for the cosine function.

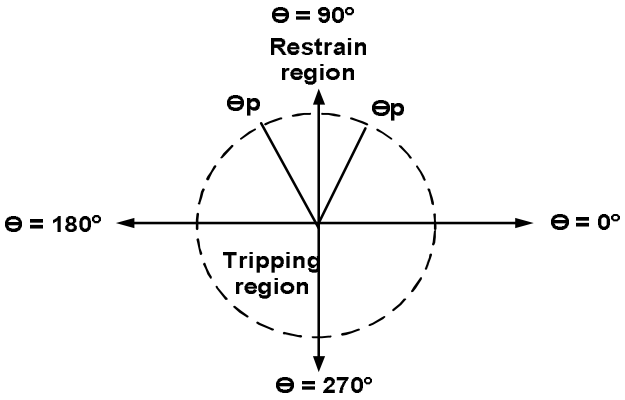

Fig 3 :- Trip and restrain region for the cosine function.

III. CASE STUDY

A. Working Of Secure Phase Comparison using cosine phase angle Scheme

As per differential protection principle ,current get compare at both ends of transmission line but as per phase angle comparison schemes we can compare phase angle with each other in very systematic manner in sending end and receiving end of phase A & then cos of angle is done and the result of comparison sends to relay logic for final operation. The same procedure with rest of two phases. The MATLAB model for this scheme is shown below.

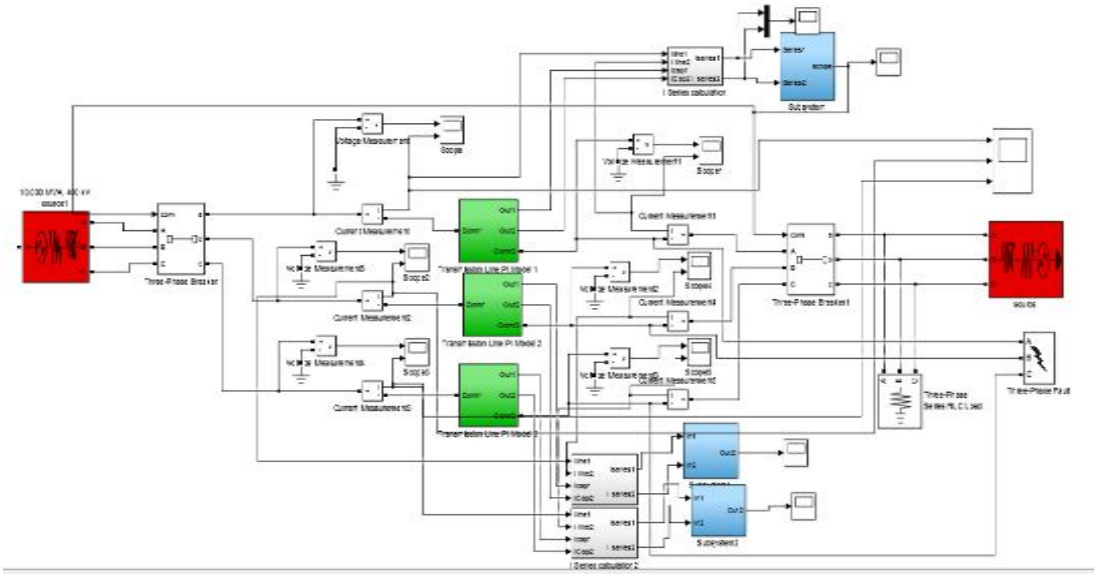

Fig. 4:- MATLAB model of Secure phase comparison scheme for transmission line protection.

In this there are two sources from both the end. The transmission line considered is 100km[3], its parameters are capacitor, inductor, resistor. After the source CB are connected in the transmission line under the protected zone. The current & voltage measurement devices are connected. The line current is measured and then capacitor current is subtracted from the line current and series current is obtained. Then the angle is calculated using cosine function then this angle is compared with the threshold angle set in the relay. If it is equal then the CB will not trip and if it is not equal or within the range that means there is fault in the transmission line so the relay will send signal to the CB and it will trip the system.

©IJRASET (UGC Approved Journal): All Rights are Reserved

B. Output wave forms when there is no fault in the transmission line

1) Behaviour of voltage and current when there is no fault in the transmission line :

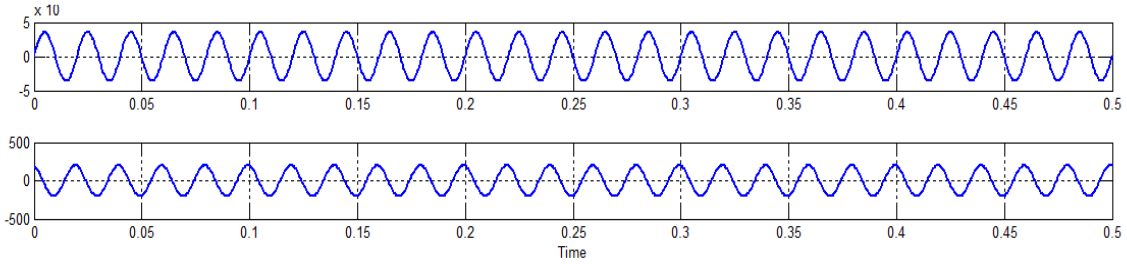

When there is no fault in the transmission line the voltage current waveform will be in a sinusoidal form that is continues.

2) Behaviour of angle in the relay without fault :

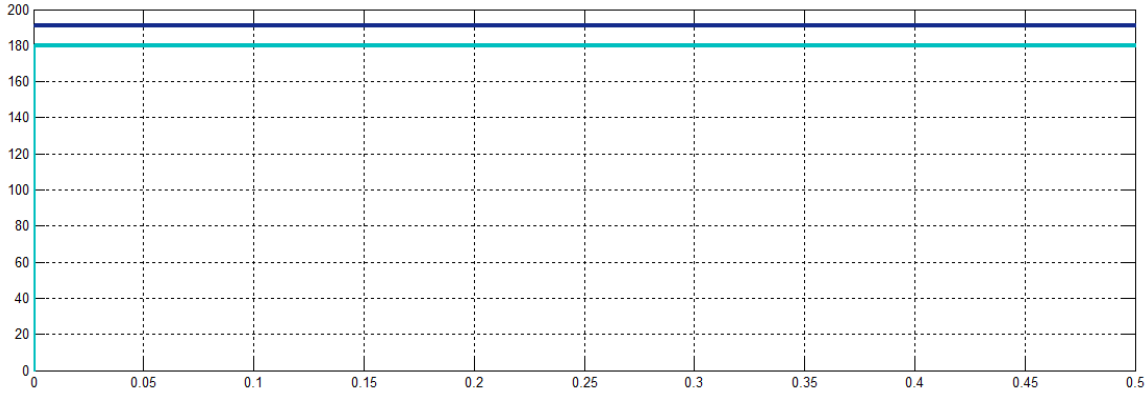

If there is no internal fault in the transmission line the relay will show the continues waveform. Which means the angle lies within the threshold value that is it will not send the signal of tripping to the CB and the system will continue to operate.

3) Final output without fault:

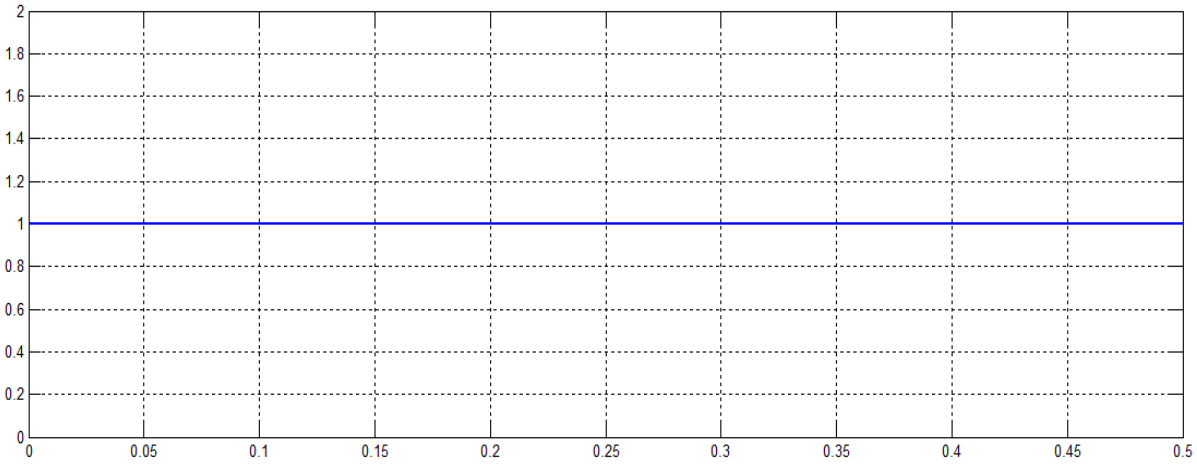

The above fig shows the output waveform of the system. The CB output will remain constant as there is no fault in the line.

©IJRASET (UGC Approved Journal): All Rights are Reserved

C. Output wave forms when there is internal fault in the transmission line

1) Behaviour of voltage and current when there is internal fault in the transmission line:

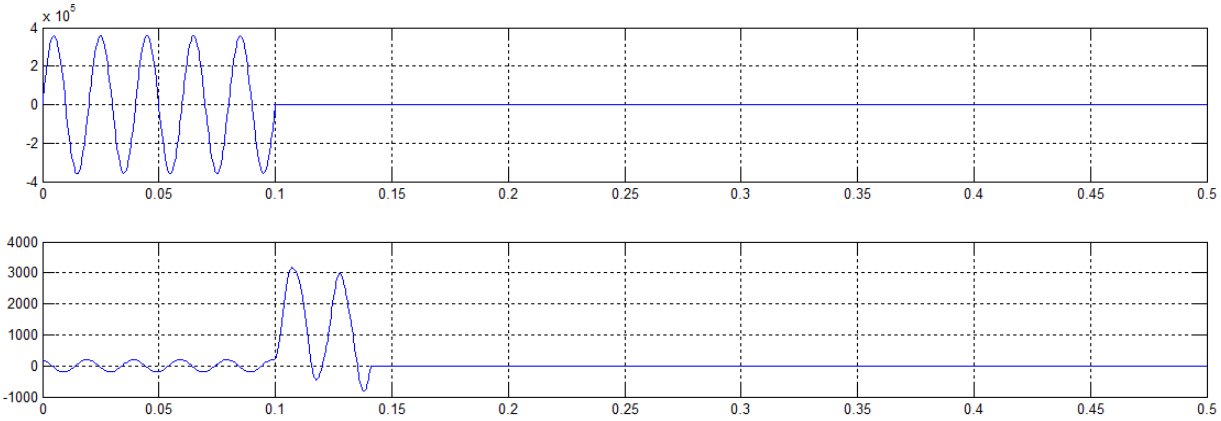

When there is fault in the transmission line the voltage will be zero at the instant when fault occurs and current will suddenly rise to the maximum value.

2) Behaviour of angle in the relay with internal fault:

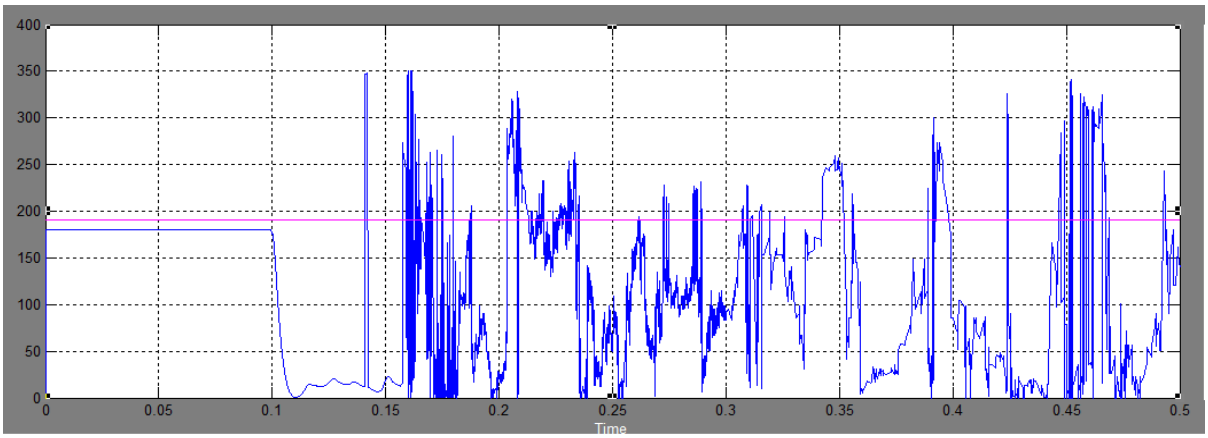

As soon as there is fault in the transmission line the angle will cross the threshold value and as it crosses the relay will send the signal to the CB.

3) Final output with fault:

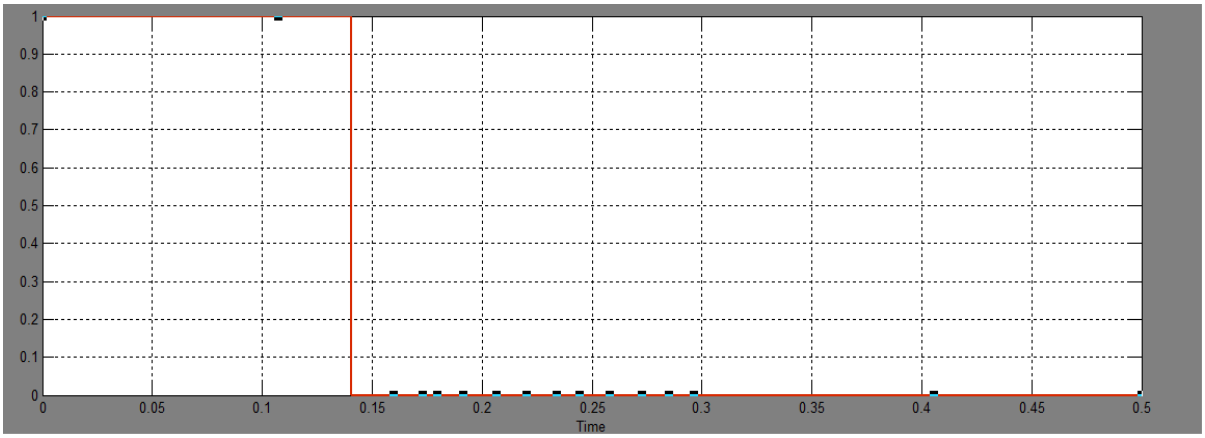

As the relay send the signal to the CB. It will trip and break the system.

©IJRASET (UGC Approved Journal): All Rights are Reserved

IV. CONCLUSIONS

Thus the secure phase comparison schemes using cosine phase angle function for the protection of transmission line are proposed in this paper. The scheme is an improved phase comparison technique which compensates the error due to the line-charging currents . Both schemes are compared with existing methods. Simulation results of the secure phase comparison using cosine funtion method is shown. The method can distinguish the external and internal fault. According to the study of this method is more superior than secure phase method. The accuracy is more and it also improve sensitivity, selectivity & simplicity of the system.

REFERENCES

[1] R. K Aggarwal and A. T Johns, " A differential line protection scheme for power system based on composite voltage and current measurements," IEEE transactions on power delivery, vol. 4**,** no. 3, july 1989.
[2] F. Namdari , S. Jamali , P.A. Crossley, "ELSEVIER, Sciencedirect, Electric power system reaserch 77 (2007) 1541-1551.
[3] Trupti p. Hinge , Sanjay S .Dambhare " Secure phase comparison schemes for transmission line protection using synchrophasors " IEEE Trans. Power Del, vol 30,no 4 Aug 2015.
[4] S. A. Soman, "A web course on power system protection," NPTEL.
[5] *"Manual for A Power Flow Programme,"* K. Shubhanga and S. R. Chandra, Eds..
[6] H. Dommel, Electromagnetic Transients Program (EMTP) Theory.
[7] Abdel-maksoud, Hatem A. Darwish, Eman S. Ahmed "Perfoemence of power differential relay for line protection"IEEE Trans. Power Del, vol. 22, no.1 Jan 2007

©IJRASET (UGC Approved Journal): All Rights are Reserved

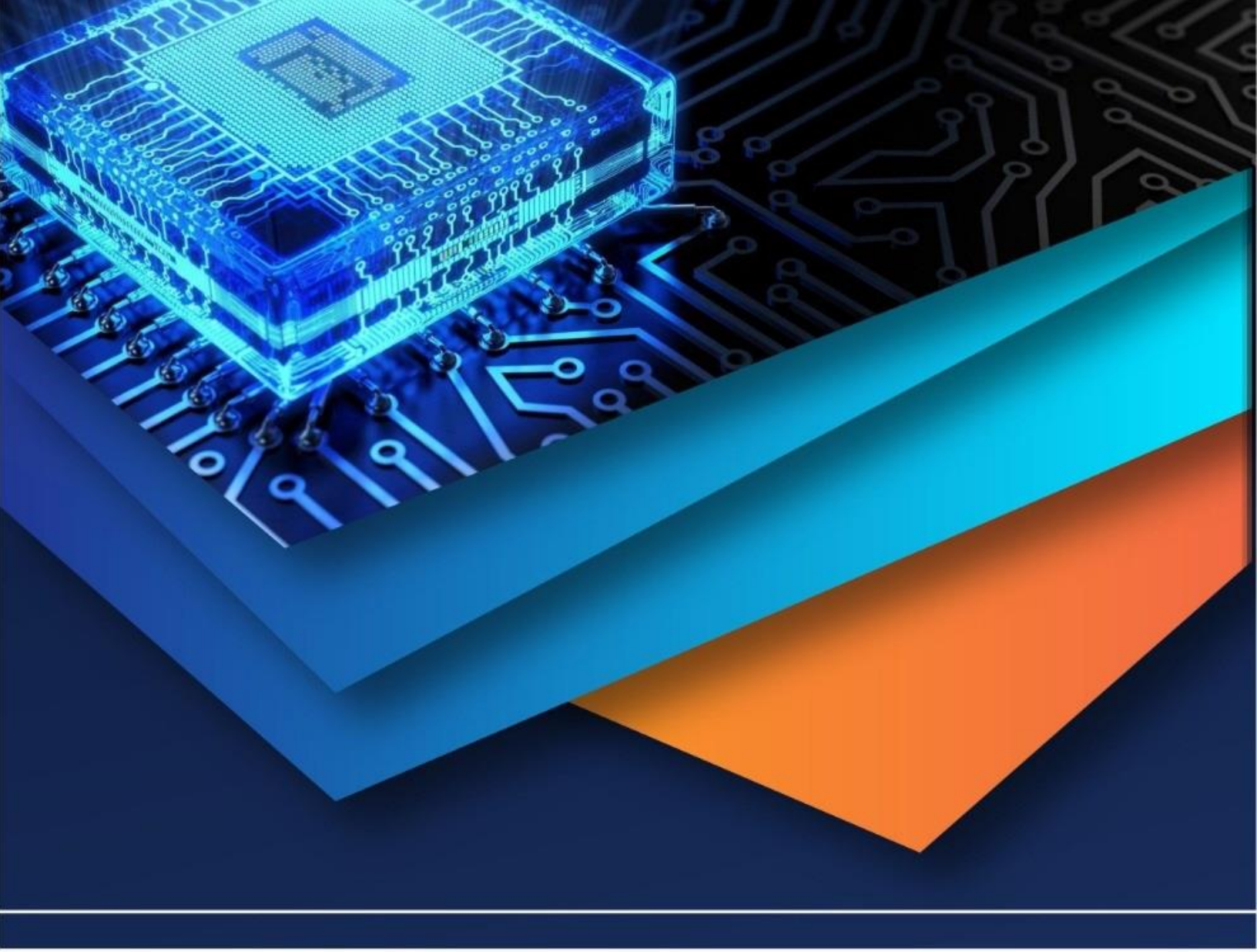

10.22214/IJRASET

45.98

IMPACT FACTOR: 7.129

IMPACT FACTOR: 7.429

INTERNATIONAL JOURNAL FOR RESEARCH

IN APPLIED SCIENCE & ENGINEERING TECHNOLOGY

Call : 08813907089 (24*7 Support on Whatsapp)