iJRASET
International Journal For Research in Applied Science and Engineering Technology

INTERNATIONAL JOURNAL FOR RESEARCH

IN APPLIED SCIENCE & ENGINEERING TECHNOLOGY

Volume: 6 **Issue:** V **Month of publication:** May 2018

DOI: http://doi.org/10.22214/ijraset.2018.5095

www.ijraset.com

Call: 08813907089 | E-mail ID: ijraset@gmail.com

International Journal for Research in Applied Science & Engineering Technology (IJRASET)
ISSN: 2321-9653; IC Value: 45.98; SJ Impact Factor: 6.887
Volume 6 Issue V, May 2018- Available at www.ijraset.com

Train Intelligent Control System with IR Sensor and Location Id Tag Operation

Om Singh[1], Sandeep Kumar[2], Ashutosh Kr Yadav[3], Chandan Yadav[4], Reena Pant[5]
[1, 2, 3, 4, 5]*Bachelor of Technology, Department of Electronics and Instrumentation, MJP Rohilkhand University Bareilly-243006, India.*

***Abstract:** This paper is an Pursuit for maintain this today running of railway control Action by automatic operation of Train engine machine and Depressed of Railway Signal Control System.. This system is designed to automatically Decreasing of train rate of motion With the light of Signal Pole , remove Worried About to driver Engine to aware of the signal light of Pole to see and Identify the Current Location of Place for different places .With This Relax to driver With automatic operation of Train Engine System and found of the Location By suitable action. This is Performed By using 8 bit Atmel microcontroller AT89s8253 and Infrared Sensor (IR), L293D IC For Motor Driver. RF-Id Tag Technology for Display of Automatic Location of every places with a Unique Identification Tag Of That Place . Voltage regulators 7805 IC and 555 Integrated Circuit (for maintain the time Delay) are suitably used.*

***Keyword:** TSOP IR, AT89s8253 Atmel Microcontroller , Voltage Regulator 7805 IC , 555 Integrated Circuit ,* **R f-Id Tag etc.**

I. INTRODUCTION

Now a day, Railway system of India is vast in Asia and Perhaps the Extremely complex in all Over the World. Railway have many types of Train as like local ,goods, superfast ,express, etc. and having many connection of Track. Although of very adequate time routine it is not always possible to be on time every time, so that we are hearing that train Driver laziness and due to fog in winter many Accident are held most.

That why, we add Intelligence Control System to the Train Engine That Automatically change the Rate of motion of Speed of train at some distance of Signal Pole With help of IR sensor and microcontroller, decreasing its speed with Increasing of Railway control safety the automatic control circuit are demand most. Microcontroller Technology advancements it is able to maintain an able to fully automatic control system for railway. This Report is an Pursuit to raise the Railway control Operation By Decreasing Rate of motion of speed of train By converting into Automatic control Operation. By using a cost effective electronic devices with comparison to other electronic circuit devices that doing same work for Designing the control action of Intelligence train System, engine consist of two sub units which are:

A. Signal Detection Unit

The concept is that whenever train engine encounters Red signal on its track the speed gets decreasing slowly and stops automatically with some distance with the signal pole. After then when green signal blinks the driver can start the train manually and go on. For the same time if the train engine has not came to stop and lights changes from Red to Green then it moves by the signal pole with gradually sow speed and then driver as required can slowly increase the speed.

The engine itself observes the red light before the operator observes it and automatically gives command to start decreasing speed and then stops. This makes the relax condition for operator in driving because he doesn't have to take care about red signal. Even if he forgets to take any action on red signal then also we can avoid accidents by the implementation of this idea.

Here we have accommodated a transmitter with signal pole which will get activated and starts transmitting signals every time when red light is on. If there is green light no transmission, engine has a receiver which receives these transmitted signals and takes required actions.

The model is divided in two parts

1) Transmitter (T)

2) Receiver (R)

The transmitter is accommodated in signal pole and gets activated only when red light is on condition. On the other hand receiver is accommodated in engine which is equipped to sense IR signals and takes suitable action.

©IJRASET: All Rights are Reserved

ISSN: 2321-9653; IC Value: 45.98; SJ Impact Factor: 6.887
Volume 6 Issue V, May 2018- Available at www.ijraset.com

B. Location Detection Unit

RF-ID technology merges wireless communication with unique identification method, in which every source emits its unique Identification Code (UIC) and then after receiving it, a receiver decrypts the signal and identifies the particular transmitter. Then this information about the source is displayed and stored for future use.

Note: To make the project feasible to represent we have provide the tagging with the switches means user can change the tag to show different location but in real time this tag will be fixed. Tag is basically four bit binary sequence in our case.

II. METHODOLOGY INVOLVED FOR MODEL

A. Description

Train (engine) model works on 24 volt DC motor and speed of engine can be varied by varying applied voltage. Switching voltage is applied in step of 18V, 12V, 15V and 9V (min speed). The 230V AC is step down to 24 V AC by 12-0-12,2Amperes step down transformer.

As shown in figure 1 this 24V AC line runs parallel with track at the top of the train. Tapping (movable) are used from this line & given to the internal circuit of engine. These tapping slides as the train run on the track and give continuous supply to circuit. On the top of the engine IR sensors are kept which senses the signal transmitted by IR Transmitter attached to signal pole. Train track is straight and 20ft long. Signal pole is placed at the end of track and train starts from farther end.

The Project is divided into two parts:

The transmitter is equipped in signal pole and gets active only when Red light is on/blinks.

The receiver is equipped in engine and senses the IR Signal and accordingly gives suitable action.

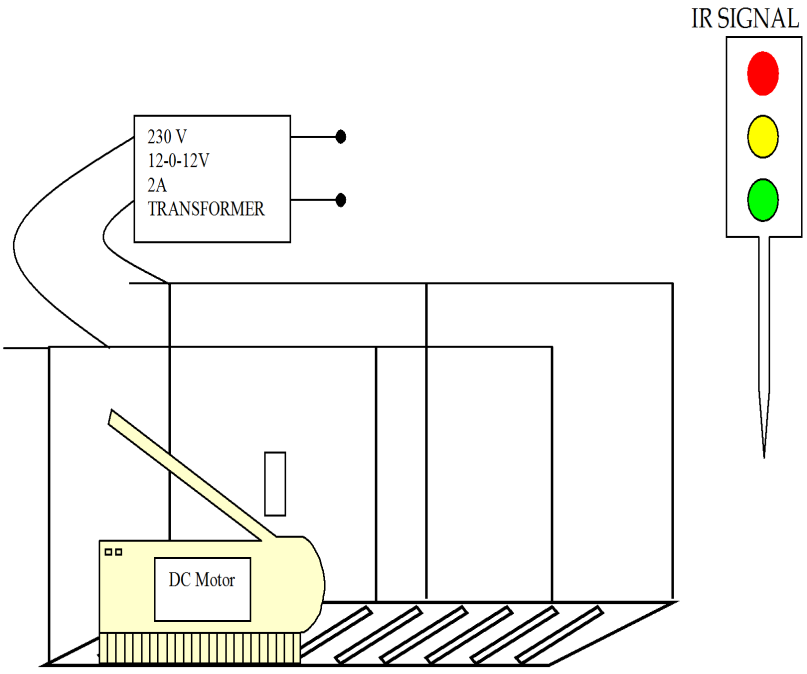

The heart of the circuit is IC 555. The main component of the circuit is only IC 555.

Fig.1 line model

III.BLOCK DIAGRAM:

A. Signal Detection Unit

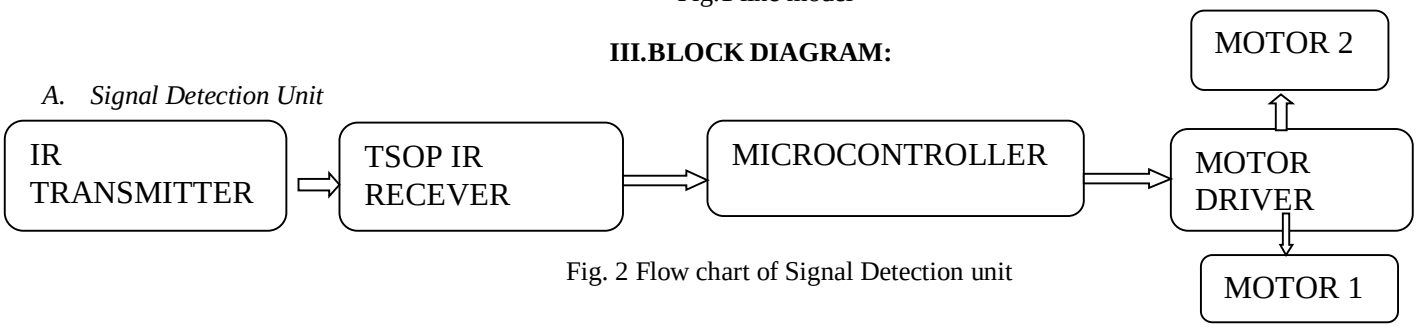

Fig. 2 Flow chart of Signal Detection unit

©IJRASET: All Rights are Reserved

ISSN: 2321-9653; IC Value: 45.98; SJ Impact Factor: 6.887
Volume 6 Issue V, May 2018- Available at www.ijraset.com

B. Location Detection Unit

1) Transmitter

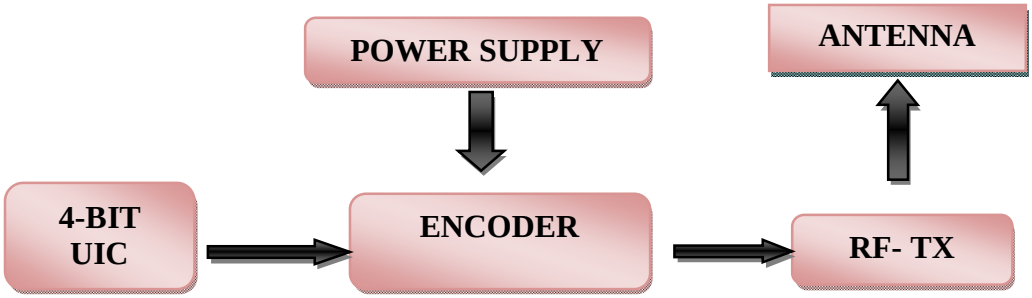

Fig. 3 Flow chart of Transmitter functioning

2) Receiver

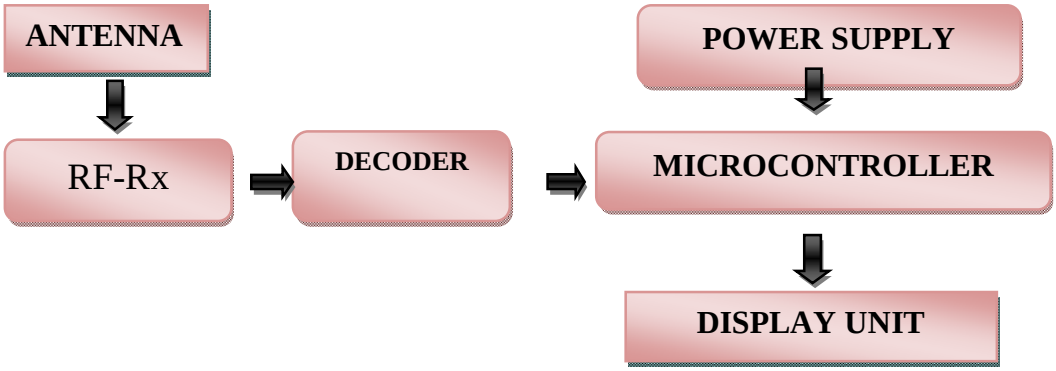

Fig. 3 Flow chart of Receiver functioning

C. Description of Blocks In Brief

1) Signal Sensing Unit

a) Input Section

i. IR based sensing unit: The sensor is capable of detecting the IR signal which will transmitted along with red color LED. The transmitter unit is IR designed around 555 timers and TSOP 1738 is receiver for IR.

b) Processing Section

i. Microcontroller: Programmed by the user to monitor the input and generate proper output for the output unit. In general this is the brain of the system.

c) Output Section

i. Motor Driver: IC L293D will be used which can drive the motor to provide proper voltage and current. It will control the stepper motor

ii. DC Motor: 2 DC geared motors for train prototype control(4-wheel drive)

2) Location Detection Unit

a) Input Section

i. ID TAG using 4-bit DIP: 4-bit DIP switch

ii. RF transmitter Interface: RF based wireless communication scheme.

iii. Encoder: Consists of HT12E encoder IC that 4 bit parallel data of the switch matrix into serial data.

iv. RF transmitter434 MHz: Modulates the serial data and transmit it over carrier frequency of 434 MHz.

v. Antenna: This is simple wire which will transmit the data through it and receive the data at receiver.

vi. RF receiver 434 MHz: Receive the modulated serial data.

vii. Decoder: Consists of HT12D decoder IC that converts the serial data it 4- bit parallel data same as at the transmitter end.

©IJRASET: All Rights are Reserved

ISSN: 2321-9653; IC Value: 45.98; SJ Impact Factor: 6.887
Volume 6 Issue V, May 2018- Available at www.ijraset.com

b) Processing Section

i. *Microcontroller:* Programmed by the user to monitor the input and generate proper output for the output unit. In general this is the brain of the system.

c) Output Section

i. *16x2 LCD:* Used as display device for required data (location).

IV. CIRCUIT CONSTRUCTION AND WORKING

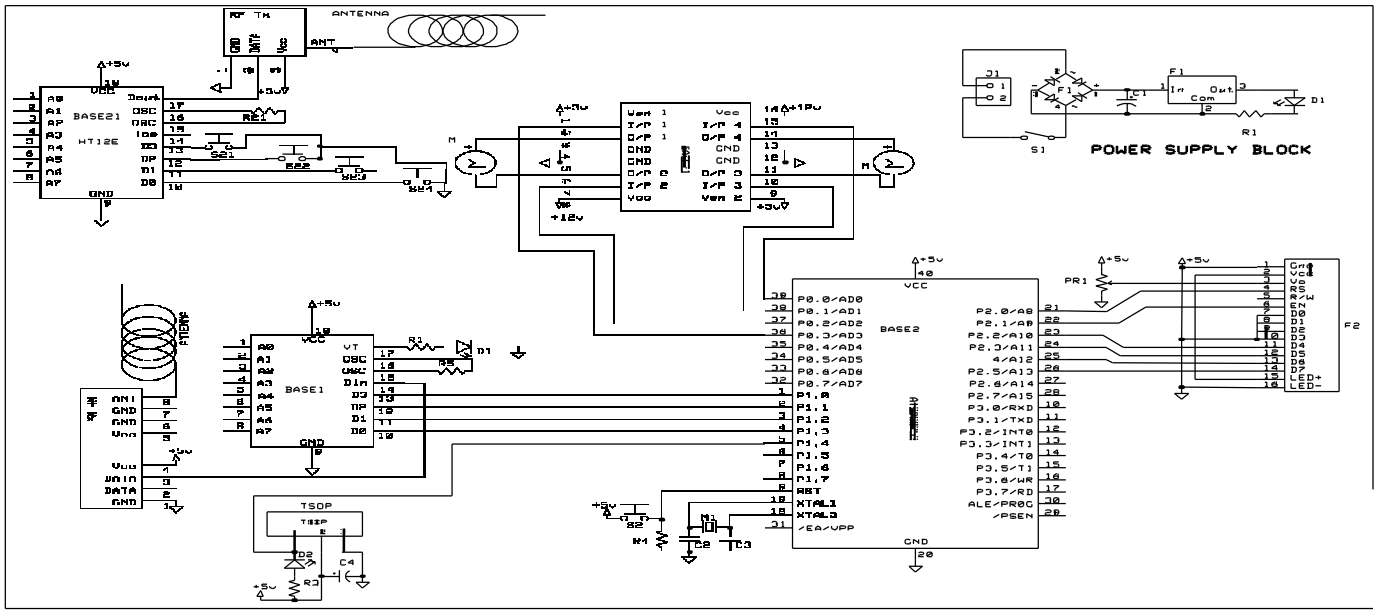

A. Circuit Diagram and Working Details:

1) *Supply(Power):* It consist of 230V AC as a input and is step down by transformer (12-0-12), after this 12 v Ac input is given to bridge diode to produce 12V pulsating DC. DC voltage is filtered through the capacitor to remove the ripples. The filtered DC is fed to 7805 regulator to fetch +5v regulated output. This regulated voltage is given to all the components to function properly.

2) *Signal Transmiiting Unit:* The system consists of a signal transmitter unit to transmit red and green signal. The signalling is done through a manual switch. The signal is transmitted at a particular frequency by using the 555 timer IC. This signal is received using the TSOP receiver which is fed to the microcontroller as input.

3) *Location* ID tracking: This system consists of two units: RF transmitter to transmit the location tag that is 4- bit binary sequence through the switch. The switches are active low. The bits are parallel data that will be encoded into serial data using the HT12E encoder and transmitted using RF transmitter (434 MHz carrier frequency, ASK modulation, 4800bps baud rate) RF receiver (same property as transmitter) which receives the serial data that is fed to the decoder HT12D to be converted in 4 bit parallel data. The data decoded is same as enabled at the transmitter end. This is the reason encoder and decoder comes in pair to ensure same algorithm for encoding and decoding to retrieve proper data. The four bit data from the decoder is given to the controller as the input.

4) *Processing Section:* The processing section consists of the controller of 8051 architecture AT89S8253 which is digital controller. It is responsible to the inputs from the two input units and generates proper output for the output unit that are Motor driver and the LCD interface. This is ensured through the programming of the controller,using MIKRO C compiler.

5) *Output Section:* This consists of the two units one LCD for location display and other motor driver unit to control the movement. The LCD is interface to the controller through 6 pins and the controller manages proper display because of programming. Since motor are high current and voltage component so they cannot be directly driven by the controller so we have interfaced a L2 93D IC which can take low voltage low current as input and give high voltage with HIGH current .

The motor speed will be controlled by controlling the voltage across the motor using concept of PWM.

©IJRASET: All Rights are Reserved

V. ADVANTAGES AND DISADVANTAGES'

A. *Advantages*

1. Automatic operation
2. Accidents on Track reduced
3. Safety
4. Fault analyse is fast
5. Reduced Cost
6. Accuracy Good
7. consumption Less Power
8. Maintained is easy & man-power Reduced

B. *Disadvantages*

1) Every train should be provided with RF technology 2. Need to be installed in large numbers

VI. APPLICATIONS

This design can be implemented together in the train engine as well as to avoid the accidents up to the maximum extent. This project is mostly useful for human life and decreasing the ratio of accidents due to the traffic signals. Some points are given below for decreasing the ratio of accidents due to

1. Fog in winter.
2. Misunderstanding by driver of trains.
3. Suddenly changing in traffic lights.
4. Some technical problems.
5. Controlling system.
6. Timing of signals

VII. CONCLUSION

From the above paper it becomes clear that the model is highly efficient for vast traffic condition which is growing concern of now a day's engineers ,As the model contains totally automated technologies it is reliable and economical and is self sufficient to avoid manual errors which is the first most concerned scope of research now a days. By the use of this system any difficulties regarding signal or manual signal ignorance can be easily avoided. Such type of train intelligent models can make a positive contribution in our country. Apart from rail safety such systems can also be installed on rods for safe journey of peoples in our country which is the great need of present days.

VIII. FUTURE SCOPE

This project can be extended for the communication between the engine driver and officials when the train encounters a technical fault. Based on this we can also install, train protection system throughout the railway Signal Pole on Track, so the train accidents can be avoided. We can detect every location of place by location detection RF-ID Technology.

REFERENCES

[1] Anil Kumar Verma, Dharmendra Kumar, Gopal Krishna gole, Jitendra kumar, "Intelligent Train Engine for the Fastest New Age Technology", International Journal of Innovative Research in Computer and Communication Engineering, vol. 1, Issue 1, March 2013.
[2] Nisha S.Punekar, Archana A. Raut, "Improving Railway Safety with Obstacle Detection and Tracking Sysstem using GPS-GSM Model", International Journal of Science & Engineering Research, Vol. 4, Issue 8, August 2013.
[3] Kenneth J.Ayala,"8051 ,Microcontroller Architecture, Programming and Applications",2nd Edition
[4] Muhammad Ali Mazidi and Janice Gillispie Mazidi, "the 8051- Microcontroller and Embedded Systems",7th edition, Pearson Education
[5] Subrata Biswas, "Pressure Sensed Fast Response Anti Collision System for Automated Railway Gate Control", American Journal of EngineeringResearch,Volume-2,Issue-11
[6] Roy Choudhary, Shail Jain, "Linear Integrated circuits", Wiley Eastern Limited
[7] Ramakant A. Gayakwad, "Op-Amp and Linear Integrated Circuits", 4
th Edition, Pearson Education.
[8] M. Wegmuller, J. P. von der Weid, P. Oberson, and N. Gisin, "High resolution fiber distributed measurements with coherent OFDR," in Proc. ECOC'00, 2000, paper 11.3.4, p. 109.
[9] R. E. Sorace, V. S. Reinhardt, and S. A. Vaughn, "High-speed digital-to-RF converter," U.S. Patent 5 668 842, Sept. 16, 1997.
(2002) The IEEE website. [Online]. Available: http://www.ieee.org/
[10] Sumit Dwivedi , Shubhankar Tiwari, Ravi Mohan Singh, Swati Sharma, "Intelligent Train Engine and Running System" , International Journal for Research in Applied Science & Engineering Technology , Volume 3 Issue IV, April 2015.
[11] Kawshik Shikder ,"Intelligent System for Train Engine with Automatic Gate Controlling using Wireless Technology in Bangladesh", Volume 3 Issue 3, March 2014.
[12] Zehang Sun, George bebis, and Ronald Miller, "OnRoad Train Detection: A Review", IEEE Transactions On Pattern Analysis and Machine Intelligence, Vol. 28, No. 5, May 2006.
[13] Sanjeev Kumar, Shweta Gupta, Dibyayan Das Sharma, "An Intelligent Train Engine Based on Auto-Signal Following Scheme Using IR Technology", The IUP Journal of Electrical and Electronics Engineering, Vol. IV, No. 4, pp. 36-47, October 2011.

©IJRASET: All Rights are Reserved

[14] Steven F. Barrett and Daniel J. Pack, Atmel AVR Microcontroller Primer: Programming and Interfacing, second edition (Synthesis Lectures on Digital Circuits and Systems), paperback - june 27, 2012.
[15] Bruce Fette, Roberto Aiello, Praphul Chandra, Daniel Dobkin, Dan Bensky, Douglas Miron, David Lide, and Ron Olexa, RF and Wireless Technologies: Know It All, Published - September 2007.
[16] Feher, Wireless Digital Communications, Englewood Cliffs, NJ: IEEE Press, 1992.
[17] Davis, Peter T. and McGuffin, Wireless Local Area Networks: Technology, Issues, and Strategies. New York: McGraw-Hill, 1995.

©IJRASET: All Rights are Reserved

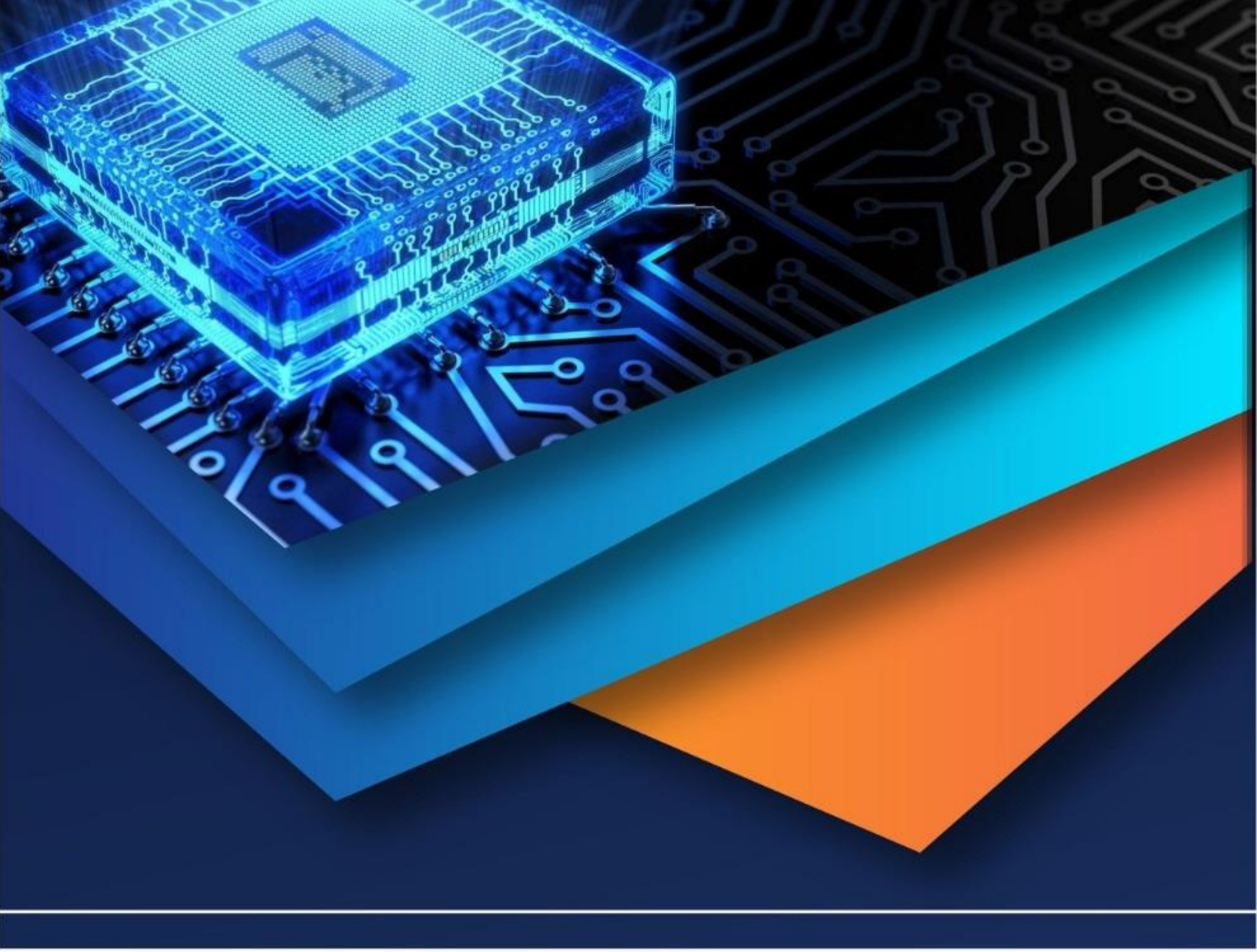

10.22214/IJRASET

45.98

IMPACT FACTOR: 7.129

IMPACT FACTOR: 7.429

INTERNATIONAL JOURNAL FOR RESEARCH

IN APPLIED SCIENCE & ENGINEERING TECHNOLOGY

Call : 08813907089 (24*7 Support on Whatsapp)