iJRASET
International Journal For Research in
Applied Science and Engineering Technology

INTERNATIONAL JOURNAL FOR RESEARCH

IN APPLIED SCIENCE & ENGINEERING TECHNOLOGY

Volume: 6 **Issue:** VIII **Month of publication:** August 2018

DOI:

www.ijraset.com

Call: 08813907089 | E-mail ID: ijraset@gmail.com

International Journal for Research in Applied Science & Engineering Technology (IJRASET)
ISSN: 2321-9653; IC Value: 45.98; SJ Impact Factor: 6.887
Volume 6 Issue VIII, August 2018- Available at www.ijraset.com

Waste Water Purification by using Solar Energy

T. Manimohan[1], Dr. Smt. G. Prasanthi[2]
[1]*PG Research Scholar, Energy Systems, Department of Mechanical Engineering, JNTUA, Ananthapuramu-515002, AP, INDIA,*
[2]*Professor of Department of Mechanical Engineering, Director, Faculty Development &IQAC, JNTUA, Ananthapuramu-515002, AP, INDIA,*

Abstract: The most important aspect for life on earth is water. Inspite of its abundant availability small percentage can be used for drinking purpose (approximate 1%). The solar water distillation comes out to be a nontoxic and promising device which purifies water that uses a renewable solar energy source. Efficiency of the solar water distillation device can be enhanced by increasing evaporation rate that is combined effect of solar radiation, and provide additional heat by solar water preheating system. The main objective of this work is purifying the water from waste water by using solar energy with the process of distillation. It is proposed to fabricate system the experimental set up for this purpose.
Keywords: solar panels, solar charge controller, copper tube, heating chamber, inverter, battery, AC heater and condenser

I. INTRODUCTION

Water is a basic necessity of man along with food and air. Fresh water resources usually available are rivers, lakes and underground water reservoirs. About 71% of the planet is covered in water, yet of all of that 96.5% of the planet's water is found in oceans, 1.7% in groundwater, 1.7% in glaciers and the ice caps and 0.001% in the air as vapor and clouds, only 2.5% of the Earth's water is freshwater and 98.8% of that water is in ice and groundwater. Less than1% of all freshwater is in rivers, lakes and the atmosphere.
Solar Distillation is by far the most reliable, least costly method of 99.9% true purification of most types of contaminated water especially in developing nations where fuel is scarce or too expensive. Solar distillation is used to produce drinking water or to produce pure water for lead acid batteries, laboratories, hospitals and in producing commercial products such as rose water. Conventional boiling distillation consumes three kilowatts of energy for every gallon of water, while solar distillation uses only the free pure power of the sun. Expensive filtration and deionising systems are even more expensive to purchase and use and will not totally purify the water by removing all contaminants. No additional heat or electrical energy is required in still and even after the sun sets, distillation continues at a slower pace into the night. Solar water purification includes two aspects; first aspect is sediment removal using carbon filter then, pathogen elimination in the manifold due to heat generated by natural convection due to parabolic trough. Initial filtration is carried by carbon a filter. Carbons filtration is a method of filtering that uses a bed of activated carbon to remove contaminants and impurities using chemical adsorption.

II. FABRICATION OF PROPOSED SYSTEM

The propose system for solar water purification is done to reduce the total equipment cost, it leads to reach the people who are unable to purchase high end costly purification systems and it will work based on solar energy, that is nothing but environment friendly and healthy. Finally the solar water purification system generates pure drinking water within a less time and within a less equipment cost. The solar water purification system is assembled with many elements to get the pure drinking water. To get a better understanding, a block diagram is shown below.

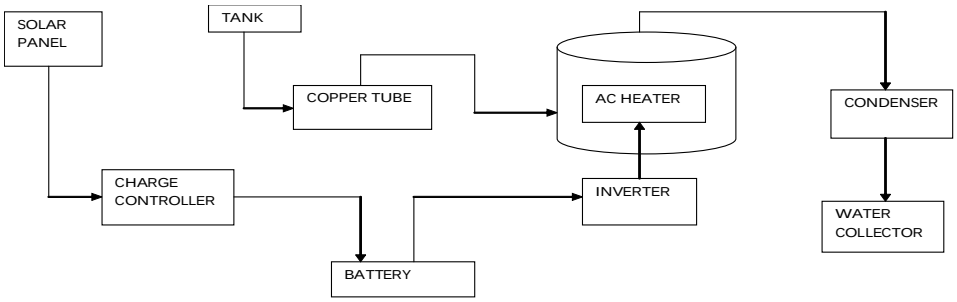

Fig:1. BLOCK DIAGRAM OF WASTE WATER PURIFICATION BY SOLAR ENERGY

The elements are all involving in water purification process to get the purified, clean and healthy water.

A. *Component And Specifications*

TABLE 1

SNO	COMPONENT / SPECIFICATION	FIGURE
1	Solar panel Capacity: 75watts Output:4Amps Voltage:21Volts	
2	Solar charge controller Input:21Volts Output:12Volts	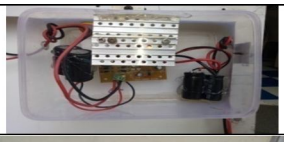
3	Inverter Capacity:900Watts Output:230Volts	
4	Ac heater Capacity:500Watts	
5	Storage tank Type:PVC Capacity:25Litres	
6	Hose pipe Storage tank to copper tube:2m Copper tube to heating chamber:1m	
7	Copper tube Diameter:0.8 cm Length:50 feet long	
8	Heating chamber Material:Aluminium Capacity:3Litres	
9	Insulation box Dimension:15x 15x 33 cm Type:Ply wood	
10	Thermal pipes Type:PVC Length:2m	
11	Condenser Tray:27x17x7cm Type:PVC Condensed coil tube dia:0.5cm	
12	Battery Type:Lead acid and rechargeable Capacity:100AH Voltage:12V	

B. Operation

fig.2

Water is stored in the storage tank and it will flow to the copper tube from the hose pipes, in the copper tube the water is get heated by absorbing the heat from the sun light up to 30 -40° C and it will flow into the heating aluminum chamber. The pre heated water gets heated and vaporized in the heating chamber by the AC electrical coil placed in it. The vapors are collected from the heating aluminum chamber and passes through the thermal pipe, which has the capability to with stand the more than 100° C temperature. Thermal pipe is connected to the condensing coil and the vapors are liquefied in the condenser and finally the clean and purified drinking water is collected into the tank.

The high intensity solar energy is converted into electrical energy by the solar panels and this electrical energy is connected to the solar charge controller. The solar charge controller controls the energy fluctuations and inverter is connected to the charge controller by the cables. In inverter the generated DC power is converted into AC power and connected to the AC heating coil which is located in the heating chamber.

In between the solar charge controller and inverter battery is connected to store and to supply generated DC current based on requirements

III. RESULTS

A. Time Taken To Collect The Water

TABLE 2

S. NO	TIME IN min	OBTAINED WATER IN ml
1	10	80
2	20	90
3	30	100
4	40	135
5	50	150
6	60	200
7	70	260
8	80	300
9	90	400
10	100	500
11	110	650
12	120	780
13	130	950
14	140	1150
15	150	1350

1) *Discussion:* The water in the copper tube is taken 15 minutes to pre heat by the sun light and 15 minutes to boil in the heating chamber and then starts conversion of water into vapors by further addition of heating. The minimum time to start the water to boil is 15 minutes it evaporates when the temperature reaches the 100° C . Then the water is slowly converted to vapors. When the temperature increases gradually production of distilled water also increases gradually.

B. Properties of Different Water Samples

TABLE 3

S.NO	PROPERTY	BORE WATER	DRINKING WATER	DISTILLED WATER (CONVENTIONAL)RANGE	PURIFIED WATER
1	p^H	7.62	6.46	5.6 to 7	5.8
2	Oxidation Reduction Potential in mV	-43	+23	-158 to +158	+53
3	Salinity in ppt	2.57	0.16	<0.5	0.1
4	Conductivity µs/m	3140	189	100 to 400	125
5	TDS in ppm	1820	111	<50	25
6	Dissolved Oxygen in ppm	4.6	5.3	5 to 6.6	5.5

1) *Discussion:* Practically 1350 ml of water is collected from 2 liters input water in 2hr 30min time with a wastage of 650ml but when compared to solar stills it gives faster output. In this project the output temperature greater than 100° C kills the bacteria and total impurities which is better than solar stills. From this experiment it is observed that properties of purified water achieved from experiment have given best results as compared with both bore water and drinking water. However the properties of this purified water lies in the range of conventional distilled water.

IV. CONCLUSION

The normal water gets purified with a low amount of cost and the values are completely checked in a different ways to know the properties there in the purified water and these are compared with the bore water, drinking water and distilled water. The properties of this purified water lies in the range of conventional distilled water.

The total experiment is fabricated with in a low cost, so it is easy to put in pure peoples house also. it is economical in financially, efficient in working, eco-friendly.

REFERENCES

[1] Md. Z. H. Khan, "Water Purification and Disinfection by using Solar Energy: Towards Green Energy Challenge", Aceh International Journal of Science and Technology,volume 4, ISSN: 2088-9860,December 2015,Pages 99-106.\

[2] yogesh s. kapnichor, "A review on solar still water purification", IJIRST- Volume 3 | Issue 09 | February 2017 ISSN(online):2349-6010.

[3] Noor Jalo, "Design Of A Portable Solar Water Purifier And Desalinator For Applications In Remote Areas"capstone report supervised by Dr.HassaneDarnmaouli,SPRING 2017.

[4] DeepakDevasagayam, "Solar Energy Based Purification of Sea Water – A Detailed Review",IRJET, Volume: 02 Issue: 07 | Oct-2015, e-ISSN:2395-0056,p-ISSN:2395-0072,Pages 835-839.

[5] Mehtre, "Water Purification by Solar Energy under natural circulation mode",IRJET, Volume: 04 Issue: 03 | Mar -2017,Pages 2199-2201.

[6] Deepak Devasagayam , "Solar Water Purifier" , IJIRAE, ISSN: 2349-2163,Volume 1 Issue 9 (October 2014),Pages 1758-1763.

[7] Thomas Clasen, "Household Water Treatment Using Sodium Dichloroisocyanurate (Nadcc) Tablets: A Randomized, Controlled Trial To Assess Microbiological Effectiveness In Bangladesh",American Journal of Tropical Medicine and Hygiene, Volume 76(1),February 2007,Pages 187-192

[8] Sophie Boisson, " Effect of Household-Based Drinking Water Chlorination on Diarrhoea among Children under Five in Orissa, India". "A Double-Blind Randomised Placebo-Controlled Trial",Published: August 20, 2013,https://doi.org/10.1371/journal.pmed.1001497.

[9] Ahmad Sakhrieh, "Water Disinfection Using CSP Technology",International Journal of Applied Engineering Researchvolume 11(ISSN 0973-4562),January 2016 ,pages 8673-8680.

[10] Muna Yacoub Hindiyeh,"Investigating the efficiency of solar energy system for drinking water disinfection",Desalination,www.elsevier.com/locate/desal,volume 259,Issue 1-3,15 September 2010,pages208-215.

[11] Scrivani,"A Solar trough concentration for fresh water production and waste water treatment", Elsevier Volume 206, Issues 1–3, 5 February 2007, Pages 485-493

[12] D. Carey Walker, "Development and Evaluation of a Reflective Solar Disinfection Pouch for Treatment of Drinking Water", Applied and Environmental Microbiology,volume70 (4),April 2004,pages 2545-2550.

[13] Martin-Dominguez, "Efficiency in the disinfection of water for human consumption in rural communities using solar radiation", Elsevir Solar energy,volume 78,Issue 1,January 2005,pages 31-40.

[14] Calkins, J., Buckles, J.D. and Moeller, J.R. (1976). "The Role of Solar Ultraviolet Radiation in Natural Water Purification". Photochemistry and Photobiology volume 24,Issue 1,July 1976,pages 49-57.

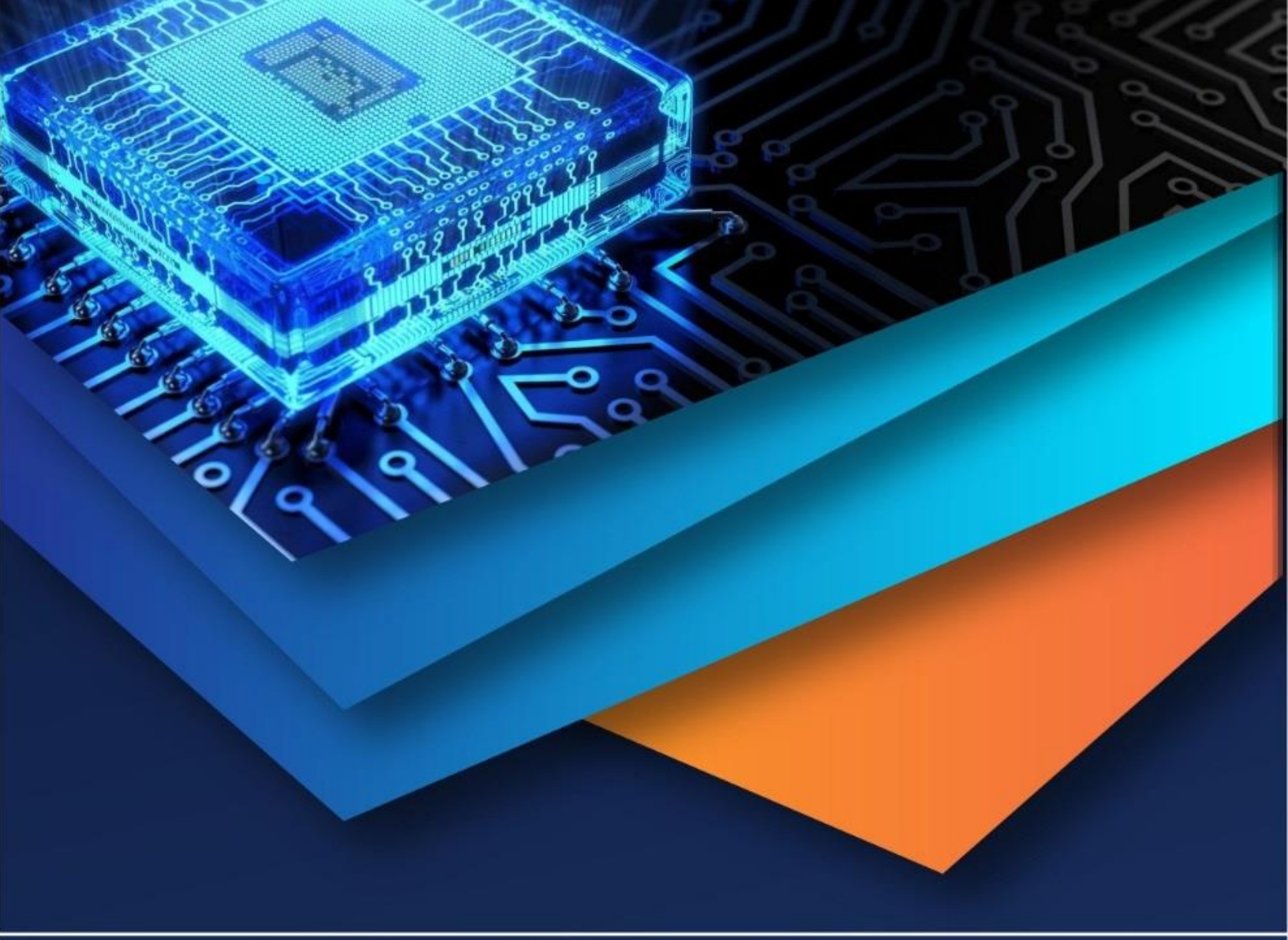

10.22214/IJRASET

45.98

IMPACT FACTOR: 7.129

IMPACT FACTOR: 7.429

INTERNATIONAL JOURNAL FOR RESEARCH

IN APPLIED SCIENCE & ENGINEERING TECHNOLOGY