iJRASET
International Journal For Research in Applied Science and Engineering Technology

INTERNATIONAL JOURNAL FOR RESEARCH

IN APPLIED SCIENCE & ENGINEERING TECHNOLOGY

Volume: 6 **Issue:** XI **Month of publication:** November 2018

DOI:

www.ijraset.com

Call: 08813907089 | E-mail ID: ijraset@gmail.com

International Journal for Research in Applied Science & Engineering Technology (IJRASET)
ISSN: 2321-9653; IC Value: 45.98; SJ Impact Factor: 6.887
Volume 6 Issue XI, Nov 2018- Available at www.ijraset.com

Controlling and Interface Integrated Circuit Analysis to Design Scanner with Solar Keyboard

Elemasetty Uday Kiran[1], Mediga Haritha[2]
[1]*Electrical and Electronics Engineering, Institute of Aeronautical Engineering, India*
[2]*Electrical and Electronics Engineering, Institute of Aeronautical Engineering, India*

***Abstract:** This paper mainly proposes an enhance design of a wireless keyboard system by studying the hardware feature of each of its element with the objective of reducing the power utilization of the wireless keyboard. In our analysis we have set the wireless keyboard with the mouse and scanner inbuilt with a fixed active voltage with the small possible current utilization. The system can enlarge the working hours by battery pack. The solar system connectivity with the solar foils on key board initiated with the MPPT and maximum power storage in battery cells with heat sensor. The main contribution of this work is to optimize and more green energy usage. The scope of this study covers a comparison and evaluation of the proposal against traditional system. The result is indicating that the simplified and latest gadgets innovation with the multiple peripherals.*
***Keywords:** Wireless keyboard, solar cell, power consumption, battery*

I. INTRODUCTION

Now a days we observed a requirement and smart easy type of substitute for the green energy system in every electronic gadgets. The world which is using in every area small to multinational companies that is computers. This computers are having external devices/input devices that are we know keyboard, mouse, printer etc. The present days we want everything in compact and all in one devices so that as requirement the proposed system is designed. The system is consisting of wireless device which is having the keyboard, mouse and scanner works on Bluetooth it stands as wireless. The world is having the 70% of users there to prepare a document and scanning printing are using.in earlier days the scanning a document is difficult because it's only done by the scanner. Well now the digital cameras, color printers are evolved. Without computers also we are scanning and printing the documents with the wireless technology. The motive of this project is to particular purpose the technology used manufacture the wireless inbuilt keyboard,mouse,scanner and described why it is superior to the now a days technology.it incorporate because why the compact device is superior to the spare keyboard, mouse ,scanner. The computer peripherals are in the part of technologic evolution. Along the years there were using separately so that the as our requirements now the gadgets are became smart and compact. This paper presents of keyboard with wireless technology. The key board is consisting of the inbuilt mouse and scanner. The key board is having solar powered it works on the solar energy with the battery system. The wireless device which is designed is developing quickly and reason is a compulsory to better the world today. The detailed description is give in this paper. The general impact of the proposed device eventually benefits the individuals. This device is works on the green energy system that is solar energy powered device.so this will be the free from energy consumption like earlier devices. This wireless keyboard is driven by the solar power with the help of the battery pack.

II. PROPOSED APPROACH

An The paper with a description of previous technology in key board consists of 111 keys. Function of system runs with 5v.we made an invention to make a platform together with wireless technology of solar & scanner keyboard which carries a voltage of 30v.To this we initiate RFID technology to connectivity of monitoring unit with individual code.to an exact module of 2.4ghz intiated.at present we are setting this functionality of keys with 112 with external features of switches. Coming to keyboard part we constructed a scanner with concave lens in rectangular mode.to scan a paper with good resolution and contrast setting. There will a zoom in and zoom out options to increase the intensity level of scanner output. With an extent connectivity of interfacing unit a max 232 IC to interface of serial communication with max 483 IC. There will be a relay to protect the interfacing components from the external power. Conversion of analog to digital conversion with exact setting fallowed with 800dpi to 1200 dpi in scanner. There is a functionality of sliding movements to scanner. To extent with solar keyboard there is a connectivity of solar foils on keyboard initiated with MPPT to absorbent of maximum power for storage in battery cells. A heat sensor is placed to know the power absorbed by the solar and storage of power in cells. In between there is a connectivity of switch for scanner.to this key board li-ion battery cells are placed to store the power with desire there will be a option of charging port to key board to charge the cells

©IJRASET: All Rights are Reserved

Correcting the section of solar cell with the chip of rs232 and link form of maximum and minimum speed structures simplified system of concave lens and concave stages to stage formation and on chip control of regular system network in transferring circuit and its structure link the energy that transforms in one form of external key of dc the functionality of keyboard at the edge of the scanning gives the 650 dpi system for absolute system control.

III. WORKING PROCEDURE

The wireless keyboard is having the 3.5 inch touchpad, scanner. Complete key board takes 30 v supply as input there is a voltage diversion for functionality of keys and scanner option.as key takes 5v of power and scanner takes 24 volts.there will be a loss of 1 volt in conversion of voltage levels from solar to keyboard. A temperature sensor take cares of absorbing voltage stored in the cells with digital display unit. When there is a use of scanning option we on the switch then the functionality of storing power is in working condition when there is no use of scanning power we can switch of the button. A continuous supply for functionality of keys is continued.comming to the max232 it carries a voltage levels of 25 volts and max 483 is 5v with all converting stages of losses and interfacing of these two ICs gives 30 volts which is exact requirement for solar keyboard and scanner option. Ac to dc conversation paragraphs must be indented. All paragraphs must be justified, i.e. both left-justified and right-justified.

A. Mathematical Analysis

V_{AC} = 230V

V_{DC} =24v

24v supply to controller

$V_{K.B}$ =5V

Paper size - (8.27*11.69)

Maximum size coverage - (7.26*12)

Max232 -25v

Max483-5v

The figure shows the system design in hardware. The wireless keyboard which is powered by solar energy.in this system the power supply is 30v and converted to 5v for keyboard, mouse and for scanner the power takes 24 volts.the boost circuit is converts the voltages to required power to the ROM which is electrically erasable read-only memory which is programmed ROM,RFID,Mictrocontroller. The analysis of the system is each major element of the wireless keyboard system. The measurement of the power consumption of keyboard each key takes the 5v.so the every consumption the 0.1v of active current is differ within the permitted active voltage range.in this the less power utilize of the system with the active current and improved power supply system, and thus the maintain the system at the lowest power consumption to effectively decrease the power exhaustion probability.

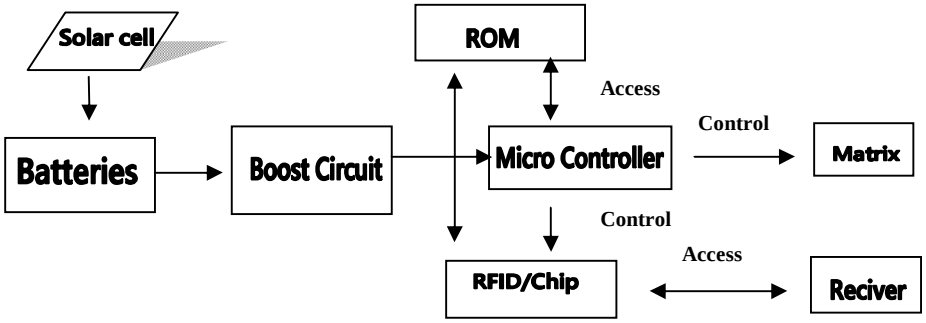

Figure 1- proposed new design wireless keyboard system

The solar cell that is having the MPPT system which is tracks the maximum power from solar cells. This is having the algorithm includes the charge controller for takeout maximum amount of available power from the solar cell under the variable conditions of sun. The solar power which is stores in lithium batteries. The charging status is shows in the display unit and also scanner on and off status is displays. The figure 2 shows the blog diagram of the inbuilt system which is the max 232 and max 483 are interfaced and given to the analog to digital converters with relay protection. A reliable support of software and alternate keys with same functionality operates the keyboard voltage and monitoring unit voltage levels from positive to negative suppression system the design of the keyboard patterns are designed with functional source of voltage conversation.

©IJRASET: All Rights are Reserved

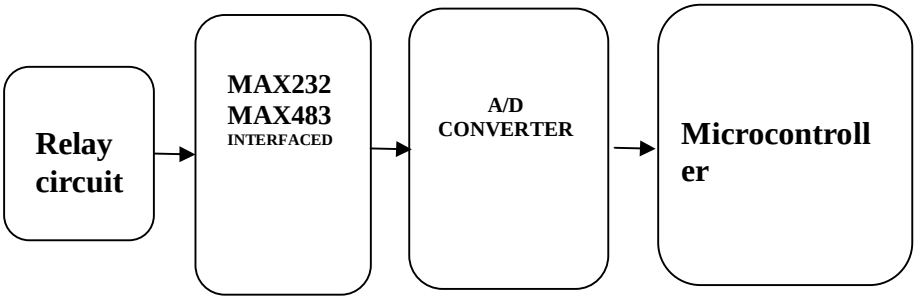

Figure 2: The blog diagram of wireless keyboard

circuit with relay unit control form for refraction and reflection of concave lens with interfaced max232 and max483 interfaced with different voltage levels gives the specification of controlling units from one level of carrying current and analog to digital converter with ac system of control is suppressed with connected voltage of dc to an extent there is a boost circuit and rfid chip control with a receiving unit .a transmitter with control section of varying elements that are connected through microcontroller with the grievance of studies is used for time division multiple access for exact commutation to control the virtual parameter prefer interfacing software which gives the technical write up of program which interact with our module and other connecting device's a inbuilt programmed made my controlling unit simpler selection of inputs and outputs is left over for communication. To overcome the issues in loading program file into multiple I/p inbuilt audio system is taken as linear technique and technical filed of communication engineering loading the machine understand file in interfacing registers gives the exact means of multiple outputs following all these technical system designing and implementation is received by our technical guide to execute the project work. Maintaining same baud rate for memo system is difficult. To recover this arrangement a constant serial communication port is given. Circuit combination is filled with active and passive networks including filters. Calculations to get feasible results in frequency band of 850 MHz ,1000 MHz are defined clearly.

Table.1 voltage and current carrying calculations

V_T	I_T	$(V_T + I_T)$	R_A	$R_A(V_T + I_T)$	$V_T * I_T$
1.5v	0.26	1.76	5.2	9.1	0.39
2.5v	0.48	2.98	3.3	9.8	1.2
3.5v	0.76	4.26	2	8.52	2.66

A small disturbance is started. To overcome this unwanted disturbance arc filters are used which gives active result. I connected complete circuit what I have explained and waiting to switch on the circuit to get multiple o/p according to formation of multiple I/up's I have maintained up to date calculation notes which makes me to refer easily design of passive in single end with appropriate components is installed by soldered unit. Smd devices is used for alternative design and to reduce in passive connectivity form one port to another port is design and to reduce complexity in pub circuit. I chosen 555timer 7828 8pin dip to maintain modes. Considering the data uses to link the address line at multiple source. Project intension is to show the connecting links to single gem module to classily memo system complete system is connected by testing and understand. Registers and ad calculation for maintain threshold value with pre setter. Calculating I/p unit to constant o/p unit to maintain single continuity. Fixing voltage level constant precaution is taken to maintain unwanted signals In order to deploy communication link by maintain band rate and bandwidth ranges. A serial communication max483 peripherals is used in two stages In the project pressure sensor is used to detent unfaith full signal and notch thermostat to maintain temperature unit Depending on the size and activity of antenna gives collection of single to mi mo system. Carrying video decoder and audio decoder into miner to get video o/p single in analog and digital. Multiplexers of single end double end for audio decoder are installed and timer is used to know the time delays. Evolving person ideas a doubt is conveyed by voice commutation. To these system we can convert send wave's in to electromagnetic waves gives the architecture of antennas are many types depend on their regular paramedic values. Our area is to conduct Mi Mo with gem module's to maintain frequency in transmitting and receiving max232ic 8051 micro controller and rs232 interfacing with pc to maintain constant 5v I/p to audio we make ready of unit with title gates .to maintain g s m module band range of 850, to 300. Regular health check or current status of the tower by using a software TEMS (Test Equipment for mobile station) through Drive Test kit. Be coordinating with the

©IJRASET: All Rights are Reserved

OMC center if there is any emergency cases. Randomly checking with other operator standard and performance on the tower impacts better in maintained. Installing or upgrading user connectivity antenna as the number of subscribers increases in that areas. Operate and to maintain Mobile Vans in crowded places for better coverage to subscribers.

IV. RESULTS

The keyboard which is having the inbuilt scanner is placed in concave lens with sliding arrangement. The scanner is click type scanner which is having the 10 mega pixel camera it can capture the any document A3 size also with the clarity and high resolution in a fraction of seconds. This scanners is also having the video recording feature is there.in this video recording the office records and some demo type are recorded. This documents can print via print with wireless system. It is also having the feature that OCR function. The OCR optical character recognition feature it helps to convert the image into text that can be edited. This can be applicable in the government sectors, insurance office, education, medical, library so many applications are there. Antenna ambiance will section critique Environmental system for remission source and proximity. Constant current source with balanced differential to level shifting stage In my project standard scope is carried to verify signal's and loading capacity IRF510 component tracing the voltage level's from medium to maximum with minimum scale to medium. I prefer the program interfacing with led display parameter of tL494, LRTC (ds1307) .Kit with acx500 gnus naming each formation of single in hardware Selection of segment display carrying temperature control and reset unit This wireless keyboard is having the unifying receiver with the wireless extender up to 10 meters distance.

Table.2 Inductance values with temperature co-efficient

N_T	P_T	L	$L(N_T + P_T)$
13.6	6.6	8.4	169.6
10.6	7.2	7.6	135.28
11.2	8.8	3.3	66
9.6	9.4	6.5	123.5

V. CONCLUSION

In this paper we have given a improved design of the wireless solar keyboard with the inbuilt scanner and mouse powered by the solar cell with battery system.it is having the stable operation compared to the earlier design with the battery system. Due to the energy storage system the power consumption would not an issue.in this wireless keyboard system the there is no memory effect, there is no rapid changes in operation, no possibility of explosion, and is small smart compact in size, easy to operate.

VI. ACKNOWLEDGMENT

We thank Professor Dr. Gandikota Ramu Department of computer science & technology @IARE for assistance with keyboard technology and scanner technique methodology, for the improvement of research work and for comments that greatly improved the manuscript

REFERENCES

[1] Zen-ichors TAKEHARA, "Future trends in the development of batteries for telecommunications and electronic apparatus", IEEEInternational Symposium Consumer Electronics, pp. 1-7, Nov.1991.
[2] R. Kelly Cowan and Robert R. Harmon, "The Market Case for Green Energy: A Multiple Perspectives Approach", Portland International Center for Management of Engineering and Technology, pp. 2498-2508, 2007
[3] W. J. Sarjeant, J. Zirnheld and F. W. MacDougall, "Capacitors", IEEE Transactions on Plasma Science, Vol. 26 pp. 1368-1392, Oct. 1998.
[4] F. Boico, B. Lehman and K. Shujaee, "Solar Battery Chargers for NiMH Batteries",IEEE International Symposium Consumer Electronics, pp. 145-152, 2005
[5] M. Nagurka, R. Marklin and Kai Liu, "Design of a test rig for measurement of stiffness and damping characteristics of computer keyboard keys", Proceedings of the 1999 American Control Conference, pp. 1749-1753, 1999
[6] Ying-Wen Bai, "A Queueing Model for Feasibility Analysis of the Solar Cell Powered Handheld Information System", IASTED International Conference Applied Modeling and Simulation.
[7] J. Seely Brown, R. P. Adler. Minds on Fire: Open Education, the Long Tail, and Learning 2.0. Ed. January/February 2008 Educause review. pp. 18-32. 2008.
[8] M. G. Moore,G. Kearsley. Distance Education: A Systems View of Online Learning. Wadsworth. ISBN 978-1-111-52099-1. 2012.
[9] D. Garrison, H. Kanuka. The Internet and Higher Education: Uncovering its transformative potential in higher education. Elsevier. Volume 7, Issue 2, 2nd Quarter, Pages 95-105. 2004.
[10] S. Tucker. Distance Education: Better, Worse, Or As Good As Traditional Education?. Online Journal of Distance Learning Administration, Volume IV, Number IV, Winter 2001.

©IJRASET: All Rights are Reserved

[11] D. Jonassen , M. Davidson , M. Collins , J. Campbell, B. Bannan Haag. Constructivism and computer- mediated communication in distance education. American Journal of Distance Education. Volume 9, Issue 2. 1995.
[12] M. Allen, J. Bourhis, N. Burrell, E. Mabry. Comparing Student Satisfaction with Distance Education to Traditional Classrooms in Higher Education: A Meta-Analysis. American Journal of Distance Education. Volume 16, Issue 2. Pages 83-97. 2002.
[13] Matsui, N. et al. (1999), A Virtual Keyboard with Single- Eye Video Camera (in Japanese), Proc. of IPSJ PROSYM99 pp.35- 42.
[14] Matsui, N. et al. (March 2000), Virtual Keyboard: Realization of Robust Real-Time Fingertip Detection from Video-Image (in Japanese), Proc. Of JSSST SPA2000.
[15] Matsui, N. et al. (September 2000), Virtual Keyboard: An Application to Stenotype (in Japanese), Proc. of HIS HIS2000.
[16] Matsui, N. et al. (September 2000), Virtual Keyboard: A Proposal of Barrier-Free Interface (in Japanese), Proc. of JSSST JSSST2000.
[17] Fingertip Detection: A Fast Method with Natural Hand. International Journal of Embedded Systems and Computer Engineering Vol. 3, No. 2, July-December 2011
[18] A Vision-Based Method to Find Fingertips in a Closed Hand. Journal of Information Processing Systems, Vol.8, No.3, September 2012
[19] Robust Part-Based Hand Gesture Recognition Using Kinect Sensor. IEEE TRANSACTIONS ON MULTIMEDIA, VOL. 15, NO. 5, AUGUST 2013
[20] Human Identification Using Finger Images. IEEE TRANSACTIONS ON IMAGE PROCESSING, VOL. 21, NO. 4, APRIL 2012
[21] Elemasetty Uday Kiran "Usage Of Neural Networks In Communication Links With Structural Inverted Vee Antenna "International Journal of Engineering Research and Applications (IJERA) , vol. 8, no.9, 2018, pp 65-69

©IJRASET: All Rights are Reserved

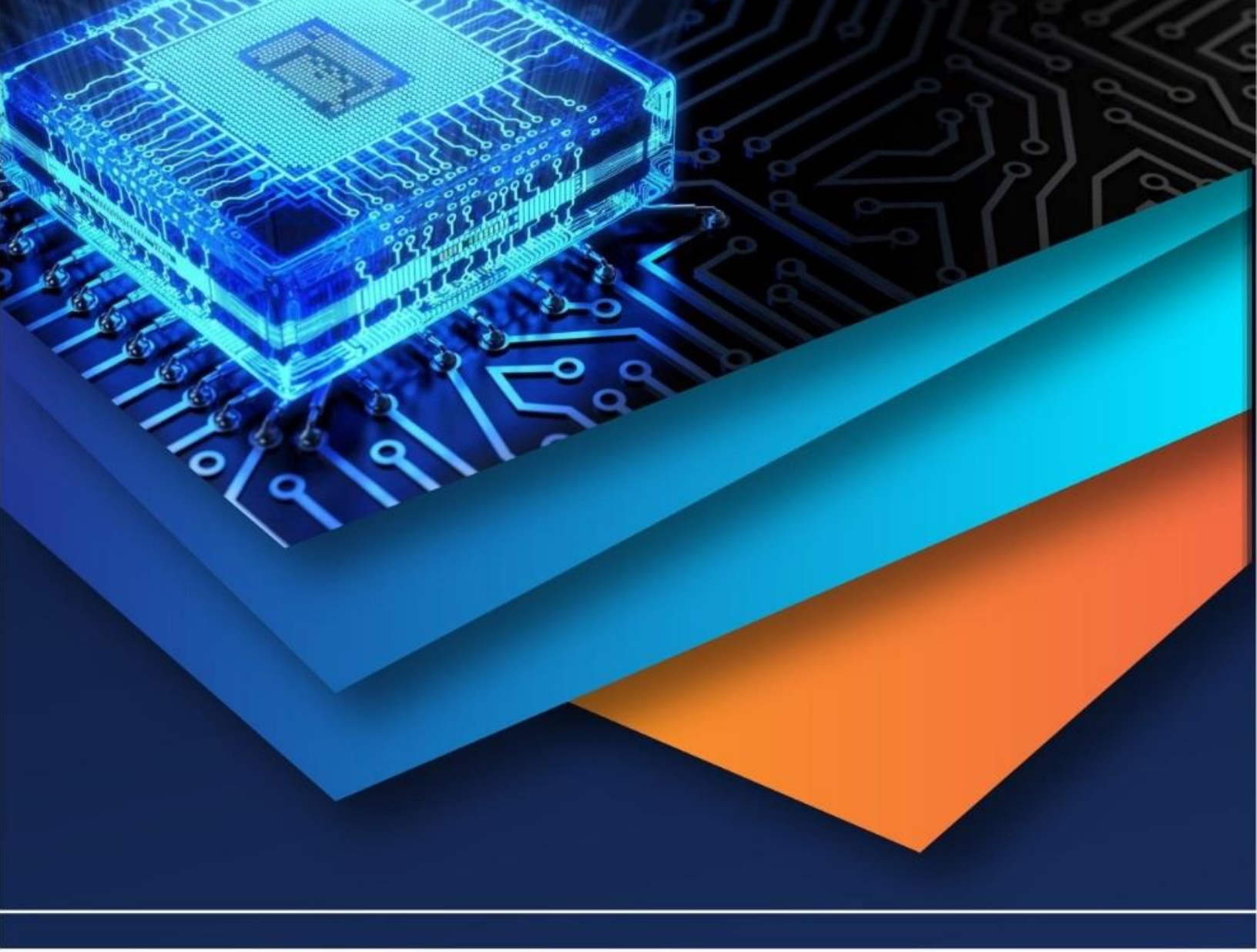

10.22214/IJRASET

45.98

IMPACT FACTOR: 7.129

IMPACT FACTOR: 7.429

INTERNATIONAL JOURNAL FOR RESEARCH

IN APPLIED SCIENCE & ENGINEERING TECHNOLOGY

Call : 08813907089 (24*7 Support on Whatsapp)