iJRASET
International Journal For Research in Applied Science and Engineering Technology

INTERNATIONAL JOURNAL FOR RESEARCH

IN APPLIED SCIENCE & ENGINEERING TECHNOLOGY

Volume: 7 **Issue:** III **Month of publication:** March 2019

DOI: http://doi.org/10.22214/ijraset.2019.3193

www.ijraset.com

Call: 08813907089 | E-mail ID: ijraset@gmail.com

International Journal for Research in Applied Science & Engineering Technology (IJRASET)
ISSN: 2321-9653; IC Value: 45.98; SJ Impact Factor: 6.887
Volume 7 Issue III, Mar 2019- Available at www.ijraset.com

Smart Factory using IoT

Dr. P. Gnana Sundari.[1], Aashika J.[2], Arthi R.[3], Charumathi S[4]
[1]HOD, [2,3,4]B.E., Dept. of E.C.E, SNS College of Engineering, Coimbatore, India.

Abstract: ***In the past, Industrial manage of discipline gadgets turned into made from self-contained systems in a community for exchanging manage records among gadgets and hardware to perform a tasks. This paper describes the collection of data using Internet of Things. Earlier, GSM was used to get entry to constrained information but it offers one manner verbal exchange based totally on queuing protocol. It consumes more time. To overcome this trouble, we have used cloud computing at the side of Internet of Things. Using Internet of Things, you may access extra wide variety of data at anytime from anywhere since the information are stored in the cloud. The sensors used will continuously sense the information and store it to the cloud. When the sensed value exceeds the threshold limit the buzzer will operate and the information will be displayed in the LCD. The IoT also helps to send this information to as many persons required by the industry to monitor and control it. This can help us to get right of entry to the statistic's time whenever it is required for quality checking.***
Keywords: Cloud computing, Industrial Internet of Things, Automation and control.

I. INTODUCTION

The non-prevent shift from mass to individualized manufacturing is situation to consistent changes in production conditions. Existing paradigms in the commercial enterprise area do no longer fulfil the developing call for adapting production systems to new product versions or unexpected temporal adjustments of production techniques within the supply chain. On the opposite hand, due to the increasing digitization new tactics upward thrust up based on enablers from records and communication era. The software of these generation in the production location is a promising approach to boom flexibility of production structures. Machines constituted of sensors and actuators are the number one components for physical method execution. Yet, the combination of those belongings in a production network is not feasible because of the heterogeneity of automation infrastructure. Furthermore, difficult- and software program layout of commercial controls do now not recall the combination of cloud generation on the shop ground neither concerning an architectural idea nor the integration into the gadgets' functionalities. One feasible method to comprehend a bendy method adaption as well as accumulating, analysing and sharing gadgets of procedure and tool statistics within the cloud is the implementation of a component level between subject and cloud diploma. This permits the use of service-orientated architectures in production allowing a well-known and bi-directional skip-internet site on line get right of entry to property fulfilling requirements of automation and cloud region. Thus, in this paper a platform concept for combining cloud technologies and commercial manage is presented.

II. EXISTING TECHNIQUE

The fundamental point of this proposed challenge is to structure and actualize an adaptable, financially savvy and notable GSM Based Modern Mechanization safety framework. The Figure 1. Indicates the block diagram of the prevailing technique inside the industrial automation the use of GSM. A GSM based totally Modern Mechanization framework is required for the inhabitant's accommodation and security. This framework encourages you to recognize thievery, spilling of hurtful gasoline, smoke prompted due to flame and within the wake of distinguishing suspicious motion, it sends an alert message to the proprietor variety and similarly safety body of workers.

Block Daigram

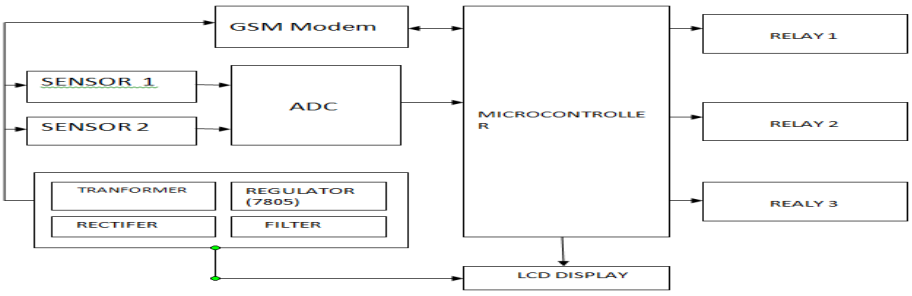

Figure 1: Block Diagram for industrial automation using GSM

©IJRASET: All Rights are Reserved

Mechanical robotization or numerical control is to control frameworks, for example, PCs to control modern hardware and procedures, reducing the requirement for labor. The task and control of the advanced mechanical gear and process needs bunches of sensors to screen a few parameters of the frameworks. This framework contains GSM modem, Microcontroller, different sensors, transfers, memory and LCD Show. To control the framework from a remote place, client needs to send the SMS order from his enrolled portable showing the activity of the gadget. The GSM modem inserted with Microcontroller gets the client's order. As per the got message, the Microcontroller will switch ON/OFF the transfers.

III. PROPOSED TECHNIQUE

A. Introduction

Remote systems and applications have done sublime achievements in government, undertaking, domestic, and individual correspondence frameworks. We proposed an association warranty component that co-works with remote system and IOT to perform unwavering excellent and execution in mechanical correspondence prepare.

Block Diagram

BLOCK DIAGRAM

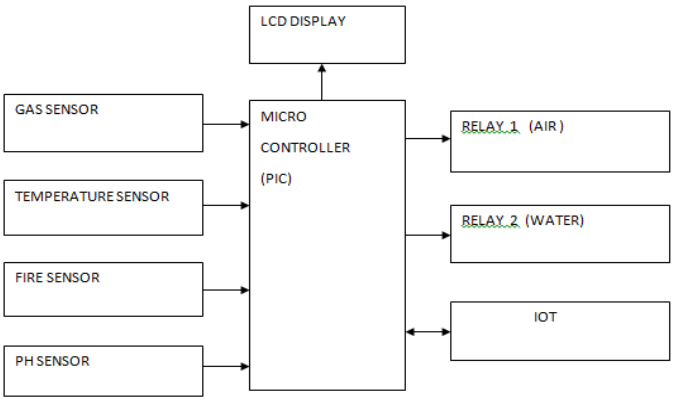

Figure 2: Block Diagram for industrial automation using IoT

The Figure 2. represents the block diagram of Industrial automation the use of IoT. We will remember executing this factor by using utilising present day far off. The data can be broke down anyplace whenever. On the off threat that the sensor parameters are extra noteworthy than the limit level, the character caution could be raised and the desired incitation is advanced the scenario the controlling of the parameters. In the proposed version the temperature, gasoline spillage, movement, fire within the commercial enterprise is found. The temperature is positioned away in cloud for analysis. Since they're positioned away in the cloud the may be accessed and assessed at whenever and at wherever. This would be increasingly more useful for any administration authorities to display an enterprise at their region. It is favored normally for great manipulate and to keep up a more relaxed circumstance.

IV. HARDWARE IMPLEMENTATION

A. Microcontroller

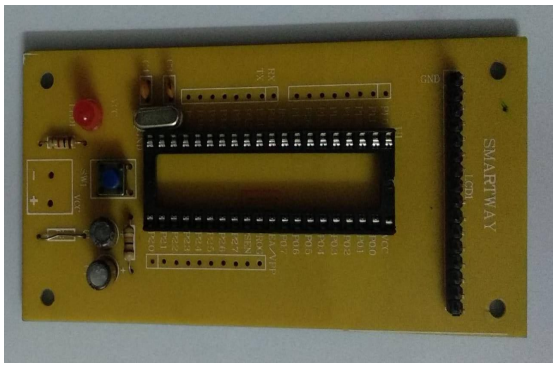

Figure 3:PIC Microcontroller

©IJRASET: All Rights are Reserved

PIC microcontroller (Programmable Interface Controllers) are digital circuits that can be programmed to carry out a sizable variety of duties. It is an development of the Arduino. We use the PIC16F877A (Figure 3) that is most renovated microcontrollers inside the enterprise. It is easy to write down-erase as in many instances as possible since it uses FLASH memory technology. It has forty pins and there are 33 pins for enter and output. It additionally has built in ADC (Analog to Digital Conversion).

B. Gas Sensor

CO2 sensor Module for use in Home or Factory to
warn of deadly Carbon-dioxide construct-ups. The unit will art work with a smooth pressure circuit and gives first-rate balance with lengthy existence.

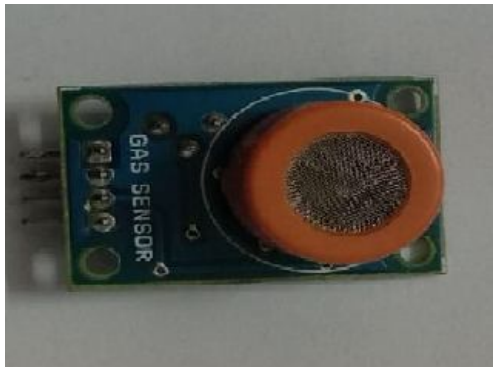

Figure 4: MG811 CO_2 Sensor

The determine 4. shows the CO2 sensor. The Carbon dioxide is sensed via the CO2 sensor. The smoke sensor is the only type of transducer which produces the voltage signal relies upon at the Carbon dioxide diploma. Then the voltage sign is given to inverting enter terminal of the comparator.

The operational amplifier LM 741 constructs the comparator. The non-inverting input terminal is fed with the Reference Voltage. The comparator compares with ordinary reference sign and produces the corresponding output errors sign. Then the output voltage is given to microcontroller as a manner to decide the Carbon dioxide content material fabric is gift or no longer within the surroundings.

C. Temperature Sensor

Figure 5: Thermistor (MIL-T-23648)

The MIL-T-234648 is a specialized resistor, deliberately designed to be thermally sensitive and its number one feature is its ability to regulate its electrical resistance in reaction to changes in case temperature. It can be used to measure temperature, or to sense temperature changes and catch up on the temperature adjustments. It's resistance is a characteristic of its absolute temperature. They are generally available with accuracy up to ±1oC, but, better accuracy devices are to be had, however are drastically more expensive. A time constant function is likewise unique to indicate the response fee to a temperature alternate (i.e., speed of the thermistor) and is typically expressed in seconds, defined because the time required to exchange 63.2% of the entire distinction among initial and very last body temperature, when subjected to a step function trade in temperature, below zero-power situations.

©IJRASET: All Rights are Reserved

D. Fire Sensor

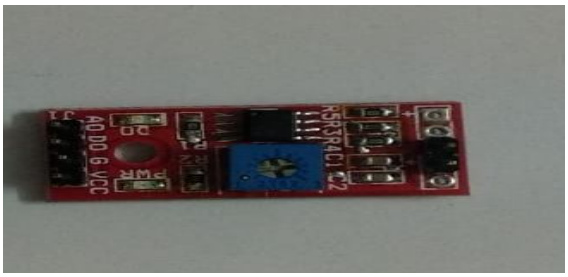

Figure 6: Fire Sensor

The Fire sensor, because the name indicates, is used as a easy and compact device for protection against fire. The module makes use of IR sensor and comparator to come across fireplace up to more than a few 1 metre. The tool, weighing approximately five grams, may be without problems established at the tool frame . It offers a high output on detecting fire. This output can then be used to take the needful movement. An on-board LED is also furnished for visible indication.

E. pH Sensor

Figure 7: pH Sensor

A medical device, the pH meter (tested within the Figure 7) is to degree the hydrogen-ion interest in water primarily based completely solutions, indicating its acidity or alkalinity in pH SCALE. Its output may be analog or virtual, and the device can be battery powered or rely upon line energy. The pH meter is utilized in lots of applications starting from laboratory experiments to fantastic manipulate. The pH meter measures the voltage amongst two electrodes and display the end result converted into their corresponding pH values.

F. LCD Display

Figure 8: 16x2 LCD Display

LCD (Liquid Crystal Display) display screen is an electronic display module and discover a wide range of utility. A 16x2 LCD display is a totally fundamental module and may be very usually utilized in diverse devices and circuits. LCD is most economical, effortlessly programmable, and has no obstacles in showing characters. A 16x2 LCD approach it may show 16 characters consistent with line and has 2 such lines. The records is the ASCII values of the characters displayed at the LCD. It has five x eight dots with cursor. It additionally has a built-in controller (KS 0066 or Equivalent).

©IJRASET: All Rights are Reserved

G. Relay

Figure 9: Relay

Relay is an electrically operated switch. Current flowing through the coil of the relay creates a magnetic field which attracts a lever and changes the switch contacts. The coil current can be on or off so relays have two switch positions and they are double throw (change over) switches. Relays (shown in Figure 9) allow one circuit to switch a second circuit which can be completely separate from the first. For example a low voltage battery circuit can use a relay to switch a 230V AC mains circuit. There is no electrical connection inside the relay between the two circuits; the link is magnetic and mechanical.
The coil of a relay passes a relatively large current, typically 30mA for a 12V relay, but it can be as much as 100mA for relays designed to operate from lower voltages. Most ICs (chips) cannot provide this current and a transistor is usually used to amplify the small IC current to the larger value required for the relay coil.

H. Voltage Regulator

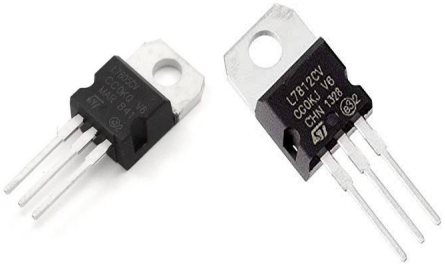

Figure 10: Voltage Regulator (5V,12V)

The ac voltage, typically 220V rms, is connected to a transformer, which steps that ac voltage down to the level of the desired dc output. A diode rectifier then provides a full-wave rectified voltage that is initially filtered by a simple capacitor filter to produce a dc voltage. This resulting dc voltage usually has some ripple or ac voltage variation. A regulator circuit removes the ripples and also remains the same dc value even if the input dc voltage) varies. This voltage regulation (shown in Figure is usually obtained using one of the popular voltage regulator IC units.

I. Step-down Transformer

Figure 11: Step-down Transformer

The potential transformer will step down the power supply voltage (0-230V) to (0-15V and 0-9V) a level. If the secondary has less turns in the coil then the primary, the secondary coil's voltage will decrease and the current or AMPS will increase or decreased depend upon the wire gauge. This is called a STEP-DOWN transformer (as in figure 11). Then the secondary of the potential transformer will be connected to the rectifier.

©IJRASET: All Rights are Reserved

V. SOFTWARE IMPLEMENTATION

Each processor is associated with an Embedded software. The first and fundamental element is the embedded software that makes a decision functioning of the embedded system. Embedded C Programming is the soul of the processor functioning inner every and each embedded gadget. Embedded C language is maximum often used to application the Microcontroller.

Earlier, many embedded applications have been evolved using meeting level programming. However, they did no longer offer portability. This disadvantage was conquer by the advent of numerous high degree languages like C, Pascal, and COBOL. In this task the PIC Microcontroller is programmed with Embedded C Program. It was the language that got tremendous attractiveness for embedded structures, and it keeps to do so. The C code written is more dependable, scalable, and portable; and in reality, tons less complicated to recognize.

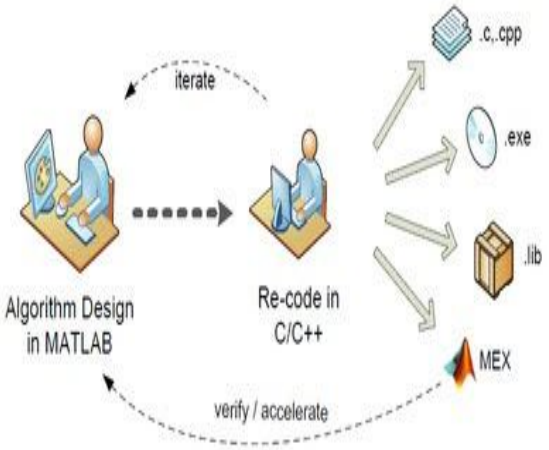

Figure 9: Working of Embedded C Program

There are certain words which can be reserved for doing specific obligations. These words are known as key phrases. They are preferred and predefined within the Embedded C. Keywords are constantly written in lowercase. These keywords ought to be described before writing the main Program.

Embedded C is used since it takes less time to broaden utility software. It reduces complexity of the program. It is easy to verify and understand. It is transportable in nature from one controller to some other.

VI. RESULT

A. Simulation Output

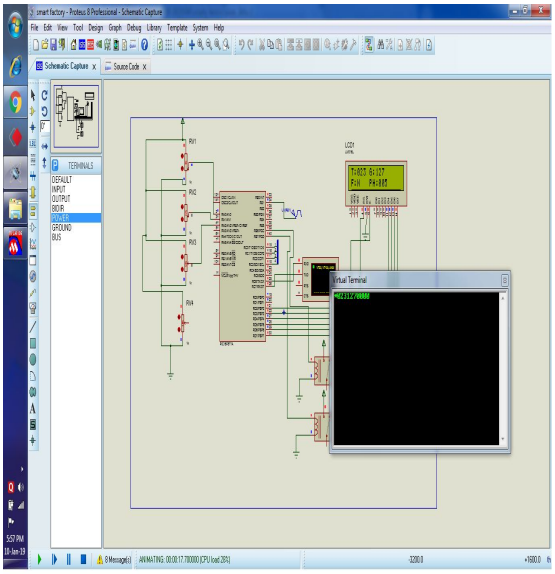

Figure 10: Simulated Output using Proteus Software

©IJRASET: All Rights are Reserved

As observed from the undertaking in part is that the statistics collected are saved within the cloud and the use of many sensor doesn't put off the system. Large variety of information are accrued and can be accessed effortlessly through the industrialist.

The assignment combines the concept of IoT and Cloud Computing which brings out automation in the great display and control of an Industry. Without polluting the external environment the commercial waste are released after purifying it to the harmless well known.

The output (shown in Figure 10) is obtained from the Proteus 8 Professional- A Schematic Capture. This helps in growing an green surroundings and innocent industrial surrounding.

B. Sensor Output

The data stored in the cloud can be viewed in the common/official website (ThingSpeak) provided by the government using the given user ID and password. The output of the sensor are given in a graph representation.

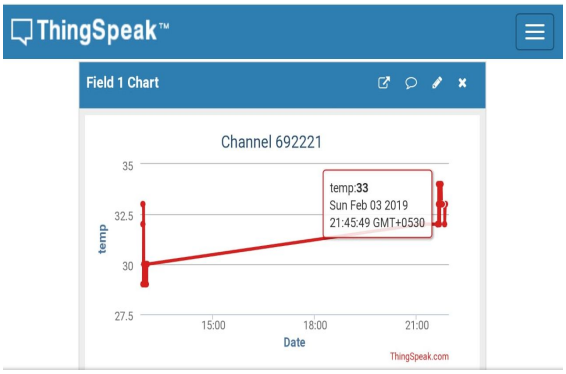

Figure 11 (a) : Output of the Temperature Sensor

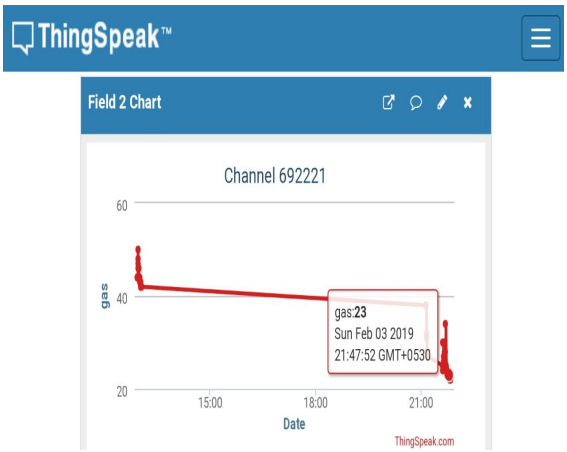

Figure 11 (b) : Output obtained from the Gas Sensor

Figure 11 (c) : Output of the pH Sensor

©IJRASET: All Rights are Reserved

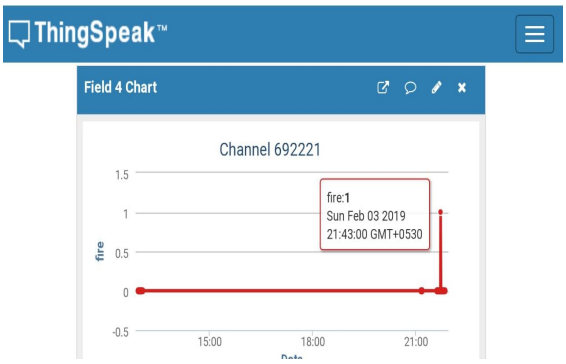

Figure 11 (d) : Output of the Fire Sensor

To know the exact value, click at any point in the graph and it will display the details of the value sensed along with the graph. It show the exact reading at a particular point (shown in the figure 11(a), 11(b), 11(c), 11(d)). Each sensor output shows the name of the sensor an the value sensed by the sensor. Also it shows the date and time in 24hours clock format.

C. Output Format

Sensor name : sensed value

Day month date year

Hours: minutes: seconds GMT+value

VII. CONCLUSION

The proposed gadget presents a clean and bendy way to accumulate the general records of the gases and the vital data for a pollution free industry. They can also be accessed without difficulty on every occasion and wherever wanted. By this the fine can be maintained peace and the defects are diagnosed fast inside a few milliseconds and the alert or warning is supplied earlier than a major hassle occurs, this is the are corrected and maintained on the initial level itself. More preferably the earlier drawbacks are overcome by using this output.

VIII. FUTURE ENHANCEMENT

In future, the project can be improved by creating an individual website for different industry and the data collected by the IoT can be viewed by entering the login ID and the unique password provided for monitoring the industry. The data collected will be represented in a graph format as shown in the Figure 11.

Also it can be improved by expanding it to the private industries and sectors for better improvement by connecting a Raspberry pi instead of arduino for getting for more information about the intruders entry. So there is no need for continuous monitoring of human.

REFERENCE

[1] Tiago M, Fernández-Caramés , (Senior Member, IEEE),and Paula Fraga-Lamas , (Member, IEEE),” A Review on Human-Centered IoT-Connected Smart Labels for the Industry 4.0”,IEEE System,2018.

[2] Prasanna Kumar Illa and Nikhil Padhi,” Practical Guide to Smart Factory Transition Using IoT, Big Data and Edge Analytics”, IEEE System, 2018.

[3] E. Goldin, D. Feldman, G. Georgoulas, M. Castano, and G.Nikolakopoulos, “Cloud computing for big data analytics in the Process Control Industry,” in 2017 25th Mediterranean Conference on Control and Automation (MED), Valletta, Malta, 2017,pp. 1373–1378.

[4] I. Aktas et al., “Funktechnologien für Industrie 4.0: ITGAG Funktechnologie 4.0,” Informationstechnische Gesellschaft im VDE (ITG), Frankfurt am Main, Jun. 2017.

[5] J. Wan, S. Tang, Q. Hua, D. Li, C. Liu, and J. Lloret, ``Contextaware cloud robotics for material handling in cognitive industrial Internet of Things," IEEE Internet Things J., to be published, doi: 10.1109/JIOT.2017.2728722.2017

[6] D. L. Hernández-Rojas, T. M. Fernández-Caramés, P. Fraga-Lamas, and C. J. Escudero, ``Design and practical evaluation of a family of lightweight protocols for heterogeneous sensing through BLE beacons in IoT telemetry applications," Sensors, vol. 18, no. 1, p. 57, Dec. 2017.

©IJRASET: All Rights are Reserved

[7] HyeongGon Jo, SoonJu Kang, Hyo Jeon Kwon," In-door Location based Smart Factory Cloud Platform supporting Device-to-Device Self-Collaboration", IEEE System, 2017.
[8] Y. Ai, M. Peng, and K. Zhang, "Edge cloud computing technologies for internet of things: A primer," Digital Communications and Networks, 2017.
[9] Jiafu Wan,(Member, IEEE),Lei Shu, (Senior Member, IEEE),"Smart Factory of Industry 4.0: Key Technologies, Application Case, and Challenges",IEEE system,2017.
[10] N. Mohamed, S. Lazarova-Molnar, I. Jawhar, and J. Al-Jaroodi, "Towards Service-Oriented Middleware for Fog and Cloud Integrated Cyber Physical Systems," in 2017 IEEE 37th International Conference on Distributed Computing Systems Workshops (ICDCSW), Atlanta, GA, USA, 2017, pp. 67–74.
[11] D. Li, H. Tang, S. Wang, and C. Liu, ``A big data enabled load-balancing control for smart manufacturing of Industry 4.0," Cluster Comput., vol. 20, no. 2, pp. 1855_1864, Jun. 2017.
[12] P. Thota and Y. Kim, "Implementation and Comparison of M2M Protocols for Internet of Things," in 2016 4th Intl Conf on Applied Computing and Information Technology/3rd Intl Conf on Computational Science/Intelligence and Applied Informatics/1st Intl Conf on Big Data, Cloud Computing, Data Science & Engineering (ACIT-CSII-BCD), Las Vegas, NV, USA, 2016, pp. 43–48.
[13] S. Wang, J. Wan, Di Li, and C. Zhang, "Implementing Smart Factory of Industrie 4.0: An Outlook," International Journal of Distributed Sensor Networks, vol. 12, no. 1, p. 3159805, 2016.
[14] Z. Shu, J. Wan, D. Zhang, and Di Li, "Cloud-Integrated Cyber- Physical Systems for Complex Industrial Applications," Mobile Netw Appl, vol. 21, no. 5, pp. 865–878, 2016.
[15] S. Wang, J. Wan, D. Zhang, D. Li, and C. Zhang, ``Towards smart factory for Industry 4.0: A self-organized multi-agent system with big data based feedback and coordination," Comput. Netw., vol. 101, pp. 158_168,Jun. 2016.
[16] S.Wang, J.Wan, M. Imran, D. Li, and C. Zhang, ``Cloud-based smart manufacturing for personalized candy packing application," J. Supercomput.,pp. 1_19, 2016. [Online]. Available: https://doi.org/10.1007/s11227-016-1879-4.
[17] Hyunjeong Lee, Sangkeun Yoo,"Design and Implementation of an Energy Trading Model for Smart Factories",IEE system, 2015.
[18] T. Goldschmidt et al., "Cloud-Based Control: A Multi-tenant, Horizontally Scalable Soft-PLC," in 2015 IEEE 8th International Conference on Cloud Computing (CLOUD), New York City, NY, USA, pp. 909–916.
[19] Carlos C. Insaurralde," Physiologically-Inspired Self-Regulation for Factory Automation", IEEE system, 2015.
[20] S. S. Setty et al., "A unified framework for the design of distributed cyber-physical systems - industrial automation example," in 2015 IEEE 10th Conference on Industrial Electronics and Applications (ICIEA), Auckland, New Zealand, 2015, pp. 996–1002.
[21] S. S. Setty et al., "A unified framework for the design of distributed cyber-physical systems - industrial automation example," in 2015 IEEE 10th Conference on Industrial Electronics and Applications (ICIEA), Auckland, New Zealand, 2015, pp.

©IJRASET: All Rights are Reserved

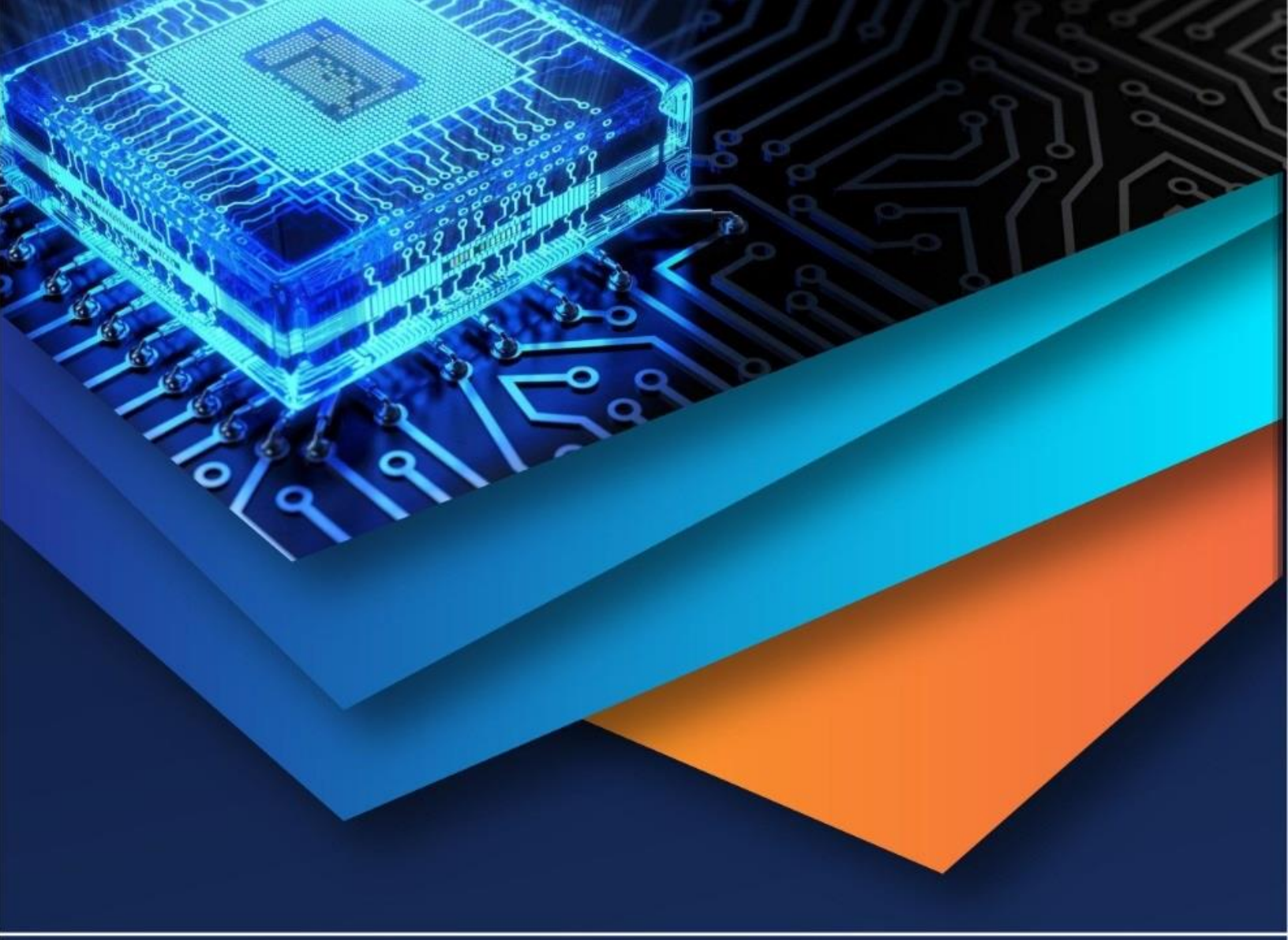

10.22214/IJRASET

45.98

IMPACT FACTOR: 7.129

IMPACT FACTOR: 7.429

INTERNATIONAL JOURNAL FOR RESEARCH

IN APPLIED SCIENCE & ENGINEERING TECHNOLOGY

Call : 08813907089 (24*7 Support on Whatsapp)