iJRASET
International Journal For Research in Applied Science and Engineering Technology

INTERNATIONAL JOURNAL FOR RESEARCH

IN APPLIED SCIENCE & ENGINEERING TECHNOLOGY

Volume: 7 **Issue:** III **Month of publication:** March 2019

DOI: http://doi.org/10.22214/ijraset.2019.3456

www.ijraset.com

Call: 08813907089 | E-mail ID: ijraset@gmail.com

International Journal for Research in Applied Science & Engineering Technology (IJRASET)
ISSN: 2321-9653; IC Value: 45.98; SJ Impact Factor: 6.887
Volume 7 Issue III, Mar 2019- Available at www.ijraset.com

Advanced Rectifier Topology with Variable Speed High Power PMSG Wind Turbine with Filter Scheme

Pooja S. Chimurkar[1], B.D. Deshmukh[2]
[1]*Student: M.E (EPS) MGM JNEC Aurangabad, Maharashtra, India*
[1]*Assistant Professor, MGM JNEC Aurangabad, Maharashtra, India*

Abstract: Advance rectifier topology consisting of two three phase diode bridges and three thyristors is proposed in the paper for variable-speed high-power permanent-magnet synchronous generator (PMSG) wind energy conversion systems (WECSs) by using filter in addition. The recommended advanced rectifier has such as simplicity, low cost and low loss. Its feature to cascade the input voltage allows it to properly manage generator speed even when the wind velocity sink to half of the rated value. This feature is identical to a voltage boost function that cannot be found in conventional diode or thyristor rectifiers. Due to nature of a diode–thyristor rectifier, it generates harmonic currents. Also the resultant torque ripple and harmonic loss in the generators are also higher. In this we alleviated this problem by adding filters which is also verified by simulation result. Consequently, maximum power-point-tracking algorithms can be applied to optimize power capture in a wide range of wind velocities. The operating principle of the rectifier is elaborated. Its use and control in the WECS is presented.
Keywords: Maximum Power Point tracking (MPPT), Permanent magnet synchronous generator (PMSG), Low cost rectifier topolog, rectifier, Wind energy conversion system (WECS), filter.

I. INTRODUCTION

As a result of increasing environmental concern, more and more electricity is generated from renewable sources. Wind energy, the most competitive renewable energy source , has been developed rapidly and demonstrated to be a viable energy technology. The cost-competitiveness of wind energy is being improved as wind power technology advances. "The future of wind-electric conversion is tied to advances is electromechanical energy conversion devices and power electronics technologies ". Low speed, direct drive generators, eliminating gearboxes, variable speed and power electronics grid interface are expected to be important features of the next generation wind energy conversion systems [1], [2].

In wind energy conversion systems (WECS), normally there are two operating modes of wind turbine generators (WTG) system: fixed speed and variable speed operating modes. In order to extract maximum power wind, the turbine rotor speed needs to be changed proportional to wind speed.

This requires variable-speed operation. Most modern WTGs are designed for variable speed operation [1], [5]. Compared with fixed speed operation, variable speed systems offer some advantages including overall efficiency, reduced mechanical stresses and audible noise at low wind speed. Permanent magnetic synchronous generators (PMSG) are widely used in the wind energy conversion systems, especially in the small or medium power range, which increases the conversion efficiency and reduces the maintenance cost due to brushless design. A typical PMSG based wind energy conversion system is shown in Figure 1, in which a full power capacity AC-DC-AC power converter is employed to convert the variable frequency variable speed generator output to the fixed frequency fixed voltage grid.

In variable speed operation, power converter in the system plays an important role for transferring PMSG output power in the form of variable voltage & variable frequency to the fixed voltage fixed frequency grid. As shown in the fig. 1, typical structure of converter consists of generator side rectifier & grid side inverter interconnected through a dc link element. This dc link element may be capacitor in VSC or inductor in CSC.

©IJRASET: All Rights are Reserved

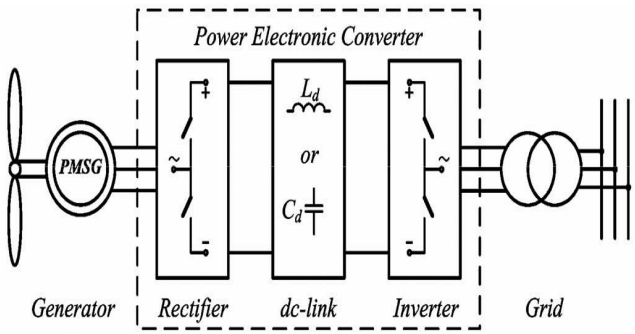

Fig. 1 General structure of a direct-drive PMSG-based WECS

Various power-converter topologies were presented in the literature for direct-drive PMSG based wind turbine [2],[5]. The most popular topology in variable-speed wind turbines is the back-to-back two-level VSC [3], [5]; to use it in higher voltage systems, however, requires the series connection of active switches and brings about the device voltage sharing issue. As alternative solutions, back-to-back multilevel VSCs such as three-level neutral-point-clamped converter [3] and multimodular cascaded H-bridge converter [4] have been proposed. Comparing to the two-level VSC, the multilevel converters enable the use of low-voltage devices and provide better waveform quality. What should also be mentioned is that, in addition to VSCs, the possibility of using medium-voltage back-to-back CSC for high-power PMSG based wind turbines. All the aforementioned converters employ pulse width modulation (PWM) in both the rectifier and the inverter, achieving torque/speed control on the generator side, while providing sinusoidal voltage and current waveforms on the grid side. Instead of back-to-back PWM converters that involve numerous expensive active power switches and complex control, an uncontrolled diode rectifier can be used as the generator-side rectifier to save cost [5]. Due to the lost control flexibility in the rectifier, the grid-side inverter, either a voltage-source inverter (VSI) or a current source inverter (CSI) has to be employed [3] to provide control over the dc stage to regulate the generator speed. The CSI solution in requires an active filter to improve grid-side harmonic profile if dc current and grid power factor are both to be regulated. In the case of a VSI, the inverter needs to be oversized to ensure proper power capture at low wind speeds, which significantly increases the overall cost in a large wind turbine. Adding a dc–dc boost converter between the diode rectifier and the VSI can avoid this problem; however, additional control and power losses are introduced that somewhat offset the obtained benefits. This paper presents advanced rectifier topology for variable speed high-power PMSG wind turbines with filters. Employing only diodes and naturally commutated thyristors, the proposed rectifier features low cost, low power loss and high reliability. It can work with non oversized PWM-VSI and is able to perform torque/speed control on the generator to capture maximum input power from varying wind speed. Also by using shunt inductors as a filter, the resultant torque ripple and harmonic losses in the generators are much reduced [6].

II. PROPOSED ADVANCED RECTIFIER TOPOLOGY

In this Section we provide the detail knowledge of advanced rectifier topology for variable speed high-power PMSG wind turbines. In our research, here we are using only diodes and naturally commutated thyristors. Thus, we get advantage of low cost, modest power loss and high reliability. This topology can work with a non-oversized PWM-VSI and also to extract maximum input power from varying wind speed; it is able to perform torque/speed control on the generator [7].

Fig. 2 shows the basic structural diagram of the proposed rectifier [6]. The circuit includes two three phase diode rectifier bridges and three individual thyristors. Three-phase power supply is applied to each diode bridge circuit and their outputs are connected parallelly. Here to connect the corresponding input phases of the two diode bridges, we are using three thyristors here. In normal operation, when the thyristors are operate in the OFF position, dc output voltage of the rectifier's is equivalent to the output of a single diode bridge circuit while if we controlled the thyristors and when it turned ON at the right instants, the outputs of the two diode bridges circuit can be cascaded and resultant of their dc output voltage get doubled.

Now for relevant operation of the rectifier, the magnitude of two three-phase input power supplies should be equal and have 180º phase displacement with each other. Due to this, when we turned on the thyristors; doubled output voltage is obtained. To interface the generator in variable-speed WECSs, the voltage-doubling feature of the proposed advanced rectifier can be used. To acquire the above feature we can use either a Permanent Magnet Synchronous Generator with dual stator windings or two PMSGs, each having single set of three-phase winding which can be used as the ac power supplies for the rectifier.

©IJRASET: All Rights are Reserved

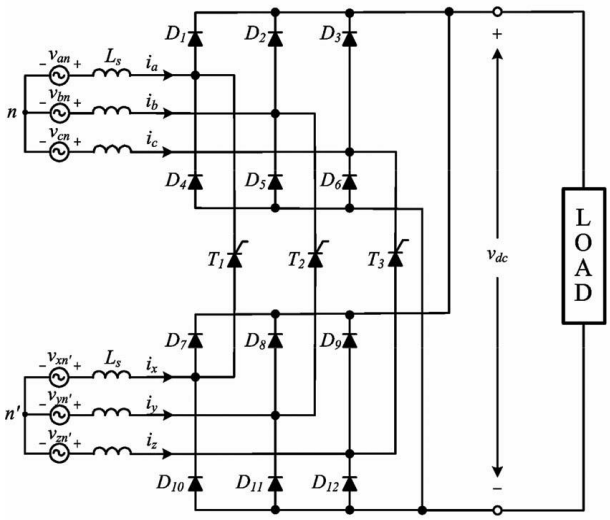

Fig. 2 Basic Structral diagram of the proposed rectifier topology

In our system [6], we used PWM-VSI is used as the grid side converter, the rectifier provides boosted dc voltage when the wind speed is lower than rated, such that the PWM-VSI's voltage rating can be well-matched with the generators while its current rating does not need to be oversized. Operating principle of the rectifier and its use in the WECS will be explained in detail in the following sections.

III. OPERATING PRINCIPLE

A. Current Path and output voltage of the Rectifier

Assume that the mutual inductances between the two sets of windings are very small. Thus the PMSG can be simplified as two sets of three-phase voltage sources with source inductances (synchronous inductances), as shown in Fig 2. Since in most of the wind energy systems, the grid side is PWM voltage source inverter and we are maintaining the dc link voltage constant by the grid side inverter and the dc link can be simplified as a constant dc voltage source, which is "load" in Figure 2 Assume that the sources, *Van*, *Vbn*, *Vcn*, and *Vxn'*, *Vyn'*, *Vzn'* are Sinusoidal in nature.

Another set of voltage sources which have 180º phase angle displacement can be expressed in Equation 1.

$$\begin{cases} v_{an} = \sqrt{2}V \sin \omega t \\ v_{bn} = \sqrt{2}V \sin\left(\omega t - \frac{2}{3}\pi\right) \\ v_{cn} = \sqrt{2}V \sin\left(\omega t + \frac{2}{3}\pi\right) \end{cases} \quad \text{and}$$

$$\begin{cases} v_{xn'} = \sqrt{2}V \sin(\omega t + \pi) \\ v_{yn'} = \sqrt{2}V \sin\left(\omega t + \frac{1}{3}\pi\right) \\ v_{zn'} = \sqrt{2}V \sin\left(\omega t - \frac{1}{3}\pi\right) \end{cases} . \qquad (1)$$

The waveforms of the voltage supplies and the section definition (used for the convenience of conduction analysis)
are shown in Fig 3. If we are neglecting the source impedances, the voltage waveforms which are appearing at the input terminals of the rectifier are the same as that of the
supply voltages. As shown in Fig 3, because the relationship among the phase voltages changes six times per fundamental cycle, the whole period can be divided into six sections accordingly.

©IJRASET: All Rights are Reserved

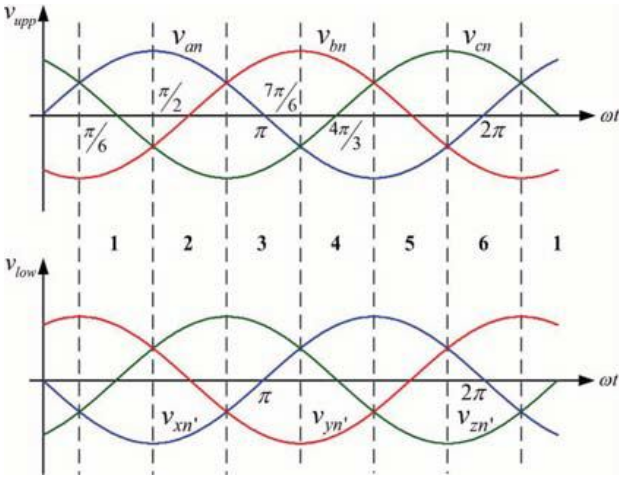

Fig. 3 Rectifier input voltage waveform

As an example, we are taking Section I to analyze the path of current. In this section, *Van* and *Vbn* are the maximum and minimum input phase voltages in the upper supply; whereas for the lower supply, *Vyn* is the maximum and *Vxn* is the minimum input phase voltages. As demonstrate in Fig. 4, the two diode bridges have different current paths and maintain their own rectification when the thyristors are in the OFF condition. Assuming that we have an inductive dc load that behaves like an ideal current source, the rectifier's output voltage *Vd is* equal to the input line-to-line voltage *Vab*.

However, if the thyristor (*T*2) connecting the minimum voltage phase in the upper supply (*phase b*) and the maximum voltage phase in the lower supply (*phase y*) is

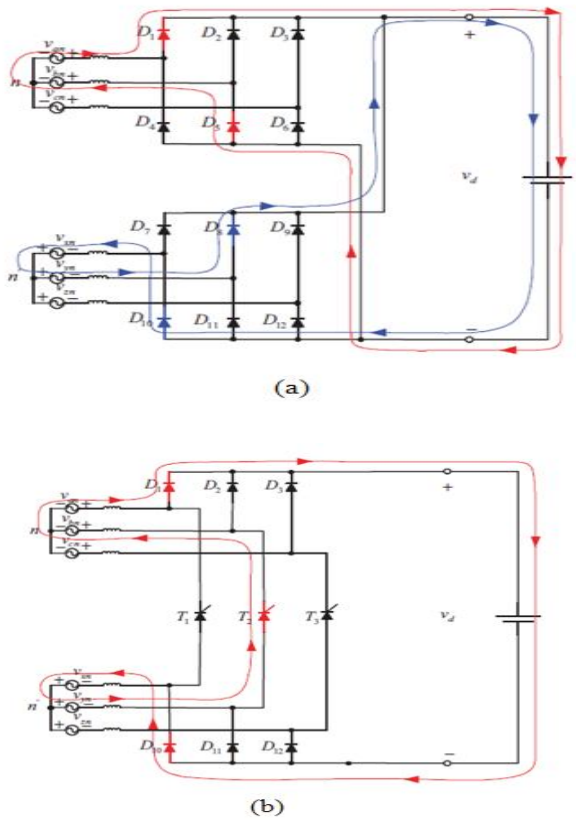

Fig. 4 Current Path in Section 1: (a) Thyristor OFF ;
(b) Thyristor ON

©IJRASET: All Rights are Reserved

Turned ON at any time within Section I, the two diode bridges are forced into a series connection through the thyristor. The dc voltage *Vd* then becomes the sum of two voltages *Vab* and Vyx, which are equal to 2*Vab* in magnitude. The current path in this case is shown in Fig. 4(a) and Fig. 4(b). The other five sections have same situations identical to Section I. We also studied the illustrations of all the current paths in all sections [8].

The principle of phase control can be readily applied to the three thyristors to provide output-voltage adjustment. The controllable firing angle range can be explained with the help of Fig. 3. In Sections II and III ($\pi/2$–$7\pi/6$), *phase c* has the minimum voltage in the upper supply while *phase z* has the maximum voltage in the lower supply. Turning thyristor T_3 on at any instant during this period allows it to start conducting. If no other thyristors are triggered on after that, the conduction of T_3 will last until $4\pi/3$, starting from where the magnitude of V_{ba} becomes greater than 2*vbc* and imposes a reverse voltage across T_3 to turn it off. This implies that the firing angle α for the thyristors can be varied in the range of 0º~ 150º. The two extreme cases happen when α = 0º, where the rectifier is equivalent to the two diode bridges in series, generating the highest dc output voltage; and when α = 150º, where the rectifier is equivalent to the two diode bridges in parallel, yielding the lowest dc output voltage. Typical output voltage waveforms under different firing angles[7], here $\alpha=0^o$ are shown in Fig. 5 assuming the load is inductive.

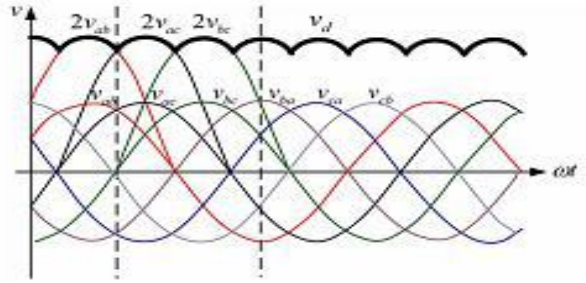

Fig 5 Rectifier output voltage for α =0º

B. MPPT control for variable speed PMSG WECS:

The simplified system diagram of a variable-speed PMSG wind turbine using the proposed rectifier as the generator side converter is illustrated in Fig 6. Under normal operating conditions, the VSI is responsible for maintaining a constant dc voltage while regulating the grid side power factor as. The whole system consists of two identically rated PMSGs which are directly coupled to the rotor shaft of the wind turbine. Each PMSG is feeding one of the two inputs of the rectifier. By adjusting the mechanical angles of the generators during installation, the 180º phase displacement requirement on the rectifier input voltages can be satisfied easily. It is worth noting that due to the distinctive structure of the rectifier, the power rating of the two PMSGs is approximately half that of the system's rated power, such that the ratings of the generator-side and the grid-side converters.

From the rectifier's point of view, the dc link can be regarded as a constant voltage source as its voltage is regulated by the fast-switching PWM-VSI. Hence, by adjusting the firing angle of the thyristors, the stator current, and thereby, the electromagnetic torque of the generators can be controlled to achieve variable-speed operation of the wind turbine. The system is, therefore, adapted to maximum power-point-tracking (MPPT) for capturing the most energy from changing wind speed.

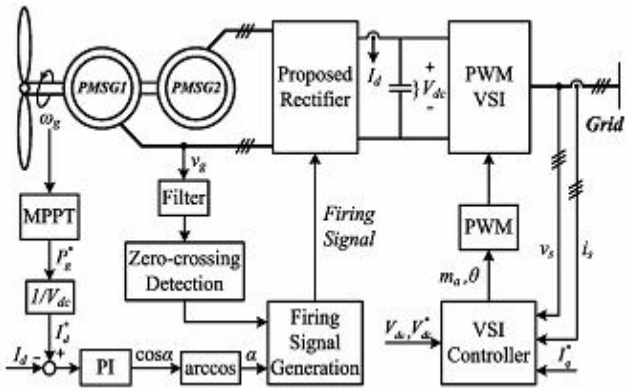

Fig 6 MPPT control of PMSG wind turbine with the proposed rectifier

©IJRASET: All Rights are Reserved

Various MPPT methods are available[9]. Here we are using a simple optimum power control method is adopted to verify the variable-speed capability of the system. The method is equivalent to the optimum torque contro which does not need mechanical wind-speed sensor, but requires premeasured output characteristics of the turbine. It is well-known that the maximum output power curve can be expressed as a cubic function of the generator speed; as long as the real output power is controlled along this curve, optimum power capture from the wind can be achieved. As shown in Fig. 6, the output power reference is determined by the measured MPPT curve and the actual generator speed. The power reference is then divided by the dc voltage to obtain the dc current reference. A single PI regulator is used to control the instantaneous firing angle for the thyristors based on the error between the dc current reference and the actual average dc current magnitude. The zero-crossing detection, which is also indispensable for firing signal generation, is performed on filtered and compensated generator terminal voltages.

IV. SYSTEM DEVELOPMENT

The wind energy conversion system presented in this work begins with a permanent magnet synchronous generator. It is followed by a passive rectification system. The inverter chosen for this is a PWM controlled set of IGBTs with incorporated controls system. Following that is a harmonic filter and a step up transformer connected to the AC supply grid. Above Fig.7 shows the block diagram of the entire wind energy system with filter scheme. The input to the permanent magnet synchronous generator (PMSG) was chosen to be a constant torque, which is a simulated output of a wind turbine. From there the electrical current runs through a diode bridge for full rectification.

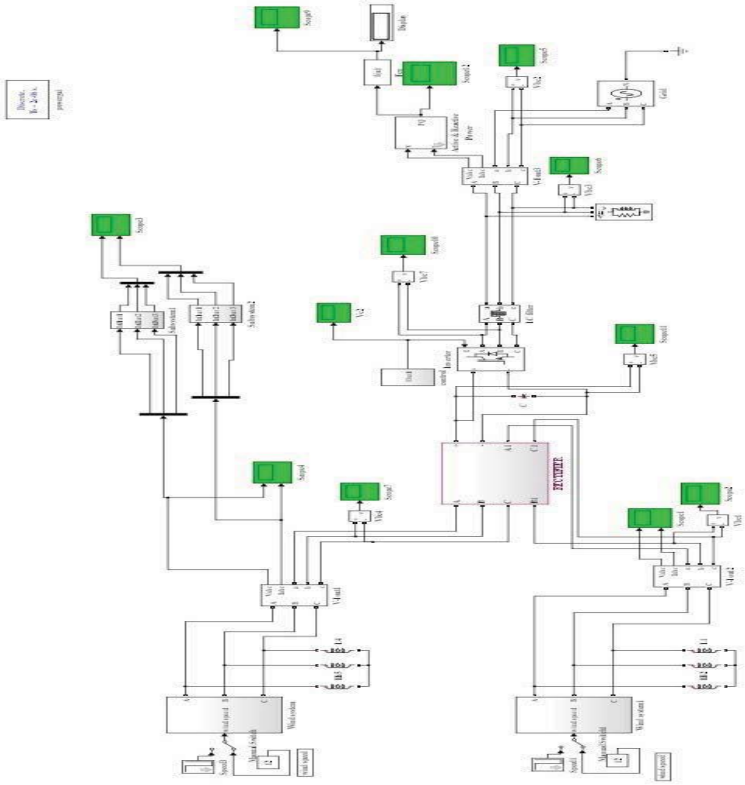

Fig. 7 Simulation design of PMSG Wind Turbine by using Filter

A capacitor bank was chosen to smooth the waveforms from the rectifier to charge to a constant voltage .Afterwards, this electrical energy is transformed back into AC through a full bridge IGBT inverter. This inverter is fed by a PWM signal to control the switches.

The block sets called the SIMPOWER SYSTEM has been utilized to design this following model shown in the Fig. 7 and then proposed model of PMSG based WECS is implemented into the SIMULINK to study the performance of the model during the different operating conditions.

Fig. 8 shows simulated design of WECS.

©IJRASET: All Rights Reserved

International Journal for Research in Applied Science & Engineering Technology (IJRASET)
ISSN: 2321-9653; IC Value: 45.98; SJ Impact Factor: 6.887
Volume 7 Issue III, Mar 2019- Available at www.ijraset.com

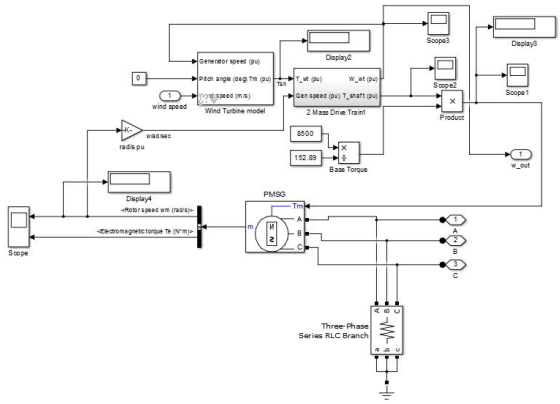

Fig. 8 Simulated design of WECS

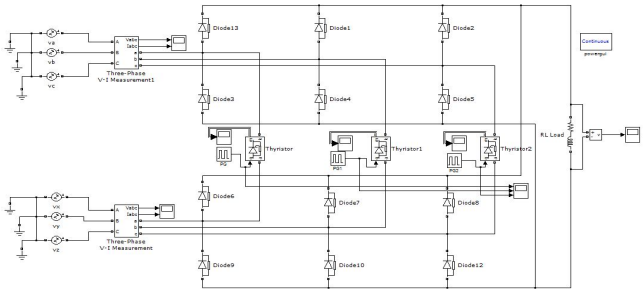

Fig. 9 Simulation diagram of Proposed rectifier

V. SIMULATION RESULT

A simulation model in matlab/simulink has been constructed to verify the rectifier operation as shown in Fig 7. The proposed rectifier and its MPPT control for variable-speed operation are designed. The simulink model is shown in Fig. 9. The simulink block consists of two three phase diode bridge rectifiers supplied with three phase supply and cascaded by three thyristor. Its supply voltages for the upper diode bridge rectifier are shown in fig 10. The proposed rectifier is used for the application of high power PMSG variable speed wind turbine and hence for the application purpose the three phase PWM inverter is designed in MATLAB and the output phase voltages are obtained. Fig. 11 Simulation result of the rectifier output for α=0º[7].

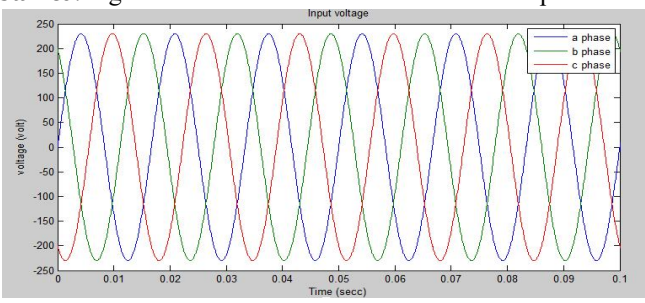

Fig 10 Input voltage supplied to the upper diode bridge rectifier

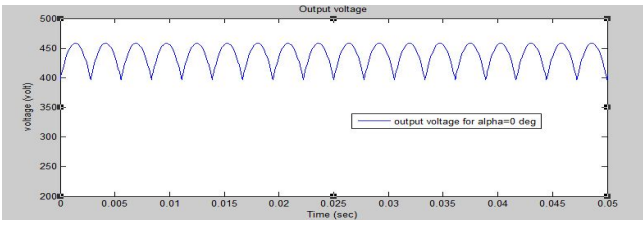

Fig. 11 Simulation result of the rectifier output for α=0º

©IJRASET: All Rights are Reserved

Let us assume that the rated wind velocity is 12 m/s. The
simulation starts with a half-rated wind speed of 6 m/s and experiences two step changes at 4 and 7 s, first rising to 12 m/s and then dropping to 9 m/s. Under the optimum power-control scheme described in the last section, the system response waveforms are shown in Fig. 12.

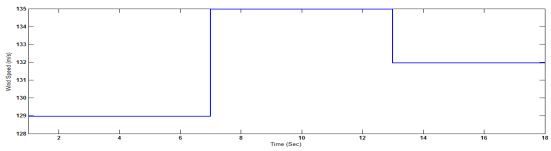

(a) wind speed waveform

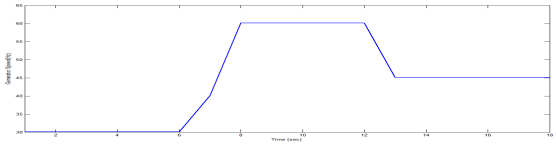

(b) Generator Speed waveform

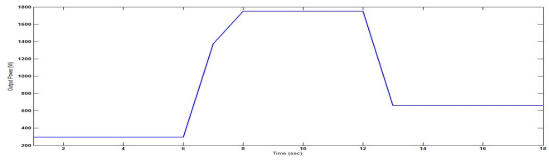

(c) Output power waveform

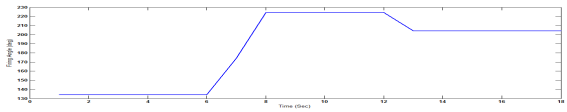

(d) Firing Angle Waveform

Fig. 12 Simulated system responses due to step changes in wind velocity

It can be clearly seen that as the controller adjusts the firing angle of the rectifier to follow the optimum power reference, the actual generator speed automatically tracks the theoretical optimum speed curve, either for a step-up or a step-down change in the wind velocity. The result verified the speed regulation capability of the proposed rectifier and the effectiveness of the control[7].
Fig. 13 shows several typical line current waveforms of the generators operating at different speeds. As part of the nature of a diode–thyristor rectifier, the currents contain relatively high harmonic components.

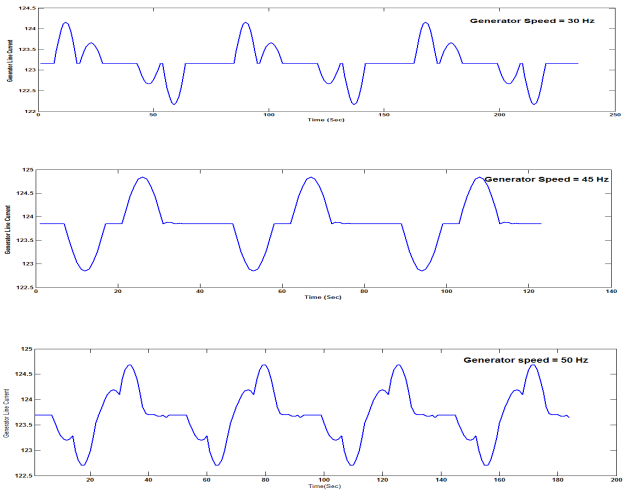

Fig. 13 Simulated Generator Line current waveform

©IJRASET: All Rights are Reserved

Compared with a voltage-source rectifier under PWM operation, the resultant torque ripple and harmonic loss in the generators are also higher[6]. The problem can be somewhat alleviated by using generators with large synchronous inductance or by adding external filters[6]. Both passive and active filters may be used for this task [13],[14].We discussed in detail[6] modified rectifier topology for variable high power PMSG by giving difference of with and without filter with simulation diagram.

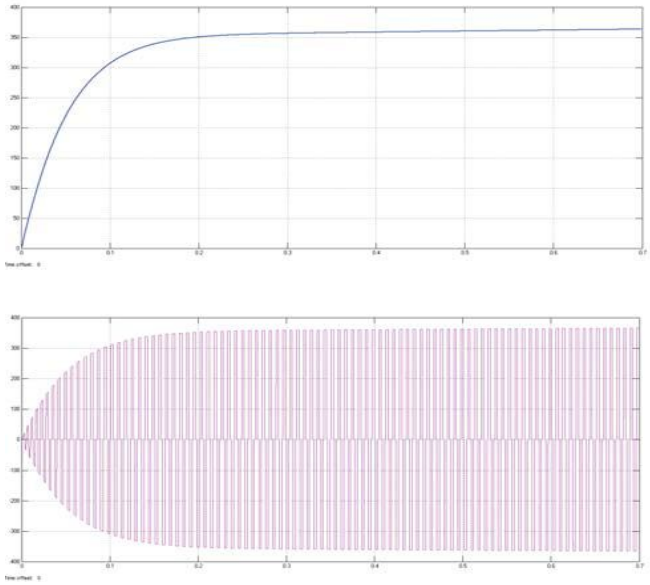

Fig. 14 Output of DC link voltage and phase to phase voltage to the rectifier without Filter Scheme

By using shunt inductors the settling time is much reduced and the system transients are also avoided. The system response is reasonably fast without any overshoots or undershoots, thereby giving stable output within very short time. The shunt inductor offers heavy opposition to the noise signal which is basically high frequency signals as shown in the Fig. 14 and Fig. 15.

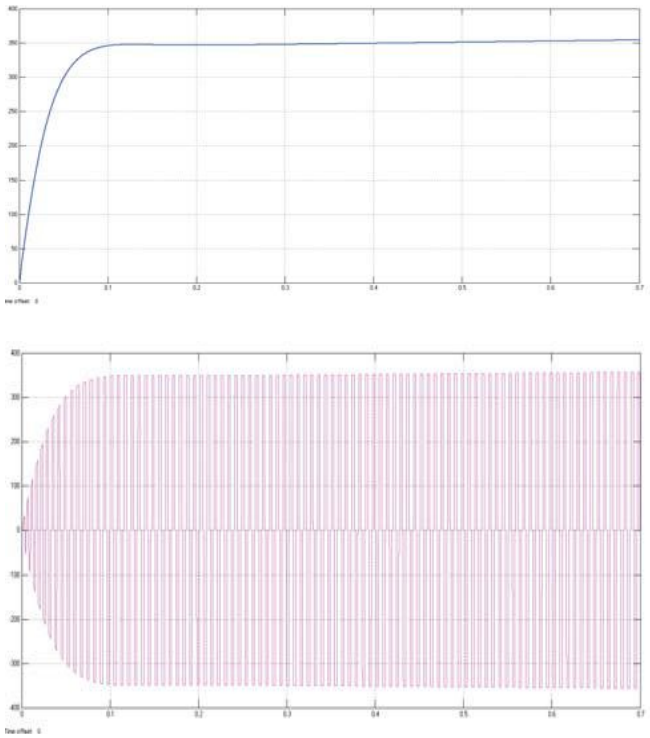

Fig. 15 Output of DC link voltage phase to phase voltage to the rectifier with Filter Scheme

©IJRASET: All Rights are Reserved

VI. CONCLUSION

This paper presents advanced rectifier topology particularly suitable for variable speed high power PMSG wind turbine applications. Built with diodes and thyristors, the rectifier features low cost, low switching loss and high reliability. The operating principle of the proposed rectifier is elaborated. The uses a simple optimum power control strategy to extract maximum power from the wind. Speed sensor less control can be easily achieved through detecting zero-crossings of the MPPT generator terminal voltages.

The simulation results clearly shows that the rectifier can properly control the generators to achieve variable-speed operation within wind velocity region from about half to full-rated value. The major advantage of the proposed rectifier is to cascade the inputs to accommodate power inflow when wind speed and the generator voltage is lower than rated. This feature of topology is equivalent to a voltage boost function that cannot be found in conventional diode or thyristor rectifiers.

Also, the rectifier can be used with a PWM-VSI for PMSG-based high-power direct-drive WECS, in which the generators and the inverter do not need to be oversized. When comparing this proposed rectifier with PWM voltage-source rectifier that has been frequently used in existing systems, it has the advantage of lower cost and power losses; however, brings higher generator current distortion and torque ripples. Also, it can only be used with synchronous generators due to the lacking of reactive current control capability. Due to the nature of diode thyristor rectifier, it generates harmonic currents. Also the resultant torque ripple and harmonic loss in the generators are also higher. But in this we alleviated this problem by adding filters shown in the simulation result. By using shut inductors, the settling time is much reduced and system transients are also avoided. The system response is reasonably fast without any overshoots or undershoots, thereby giving stable output within very short time. The shunt inductors offers heavy opposition to the noise signal which is basically high frequency signal.

In short, this advanced rectifier provides a cost-effective solution for generator-side converter in variable-speed high power PMSG-based wind turbines. Also by using shunt inductors, the resultant torque ripple and harmonic losses in the generators are much reduced. Wind power generation has grown at a very fast rate in the past decade and it will continue to do so as power electronics technology is increasing day-by-day.

REFERENCES

[1] Muller, S.; Deicke, M.; De Doncker, R.W.; " Doubly Fed Induction Generator Systems for Wind Turbines" IEEE Industry Applications Magazine, May-June 2002, Pages: 26-33

[2] Jamal A. Baroudi, VenkataDinavahi, Andrew M. Knight, "A review of power converter topologies for wind generators", www.elsevier.com/locate/renene

[3] A. Yazdani and R. Iravani, "A neutral-point clamped converter system for direct-drive variable-speed wind power unit," IEEE Trans. Energy Conv., vol. 21, no. 2, pp. 596–607, Jun. 2006.

[4] C. H. Ng, M. A. Parker, L. Ran, P. J. Tavner, J. R. Bumby, and E. Spooner, "A multilevel modular converter for a large, light weight wind turbine generator," IEEE Trans. Power Electron., vol. 23, no. 3, pp. 1062–1074, May 2008.

[5] Pooja Chimurkar, Pranjali Kothavade, "A review of different power converter topologies for PMSG Wind Turbine",ICCES-2016, 978-1-5090-1066-0 ©2016 IEEE

[6] Pooja Chimurkar, Pranjali Kothavade, "Simulation of Modified Rectifier system for Variable Speed High Power PMSG wind turbineby using filter", ICCTCEEC-2017, 978-1-5386-3243-7©2017 IEEE

[7] Jiacheng Wang, Student Member, IEEE, Dewei (David) Xu, Member, IEEE, BinWu, Fellow, IEEE, and ZhenhanLuo, "A Low-Cost Rectifier Topology for Variable-Speed High-Power PMSG Wind Turbines", IEEE TRANSACTIONS ON POWER ELECTRONICS, VOL. 26, NO. 8, AUGUST 2011A

[8] D. Xu and Z. Luo, "A novel AC–DC converter for PMSG variable speed wind energy conversion systems," in Proc. IEEE IPEMC, 2009, pp.1117–1122.

[9] EftichiosKoutroulis and Kostas Kalaitzakis," Design of a Maximum Power Tracking System for Wind-Energy-Conversion Applications",IEEE Transactions on Industrial Electronics, vol. 53, No. 2, April 2006.

[10] Yifan Tang, Longya Xu, "A Flexible Active and Reactive Power Control Strategy for a Variable Speed Constant Frequency generating System", IEEE Transactions on Power Electronics, Vol.1O, Issue.4, pp.472-478, 1995.

[11] Z. Chen, J. M. Guerrero, and F. Blaabjerg, "A review of the state of the art of power electronics for wind turbines," IEEE Trans. Power Electron.,vol. 24, no. 8, pp. 1859–1875, Aug. 2009.

[12] G. M. Masters, "Renewable and efficient electric power systems",John Wiley and Sons, 2004.

[13] P. Tenca, A. A. Rockhill, T. A. Lipo, and P. Tricoli, "Current source topology for wind turbines with decreased mains current harmonics, further reducible via functional minimization," IEEE Trans. Power Electron.,vol. 23, no. 3, pp. 1143–1155, May 2008.

[14] Y. Fujii, C. Hasegawa, F. Tatsuta, and S.Nishikata, "Dynamic performance analysis of a hybrid wind turbine generator system," Electr. Mach. Syst. 2008. ICEMS 2008. Int. Conf., pp. 2271–2276, 2008.

©IJRASET: All Rights are Reserved

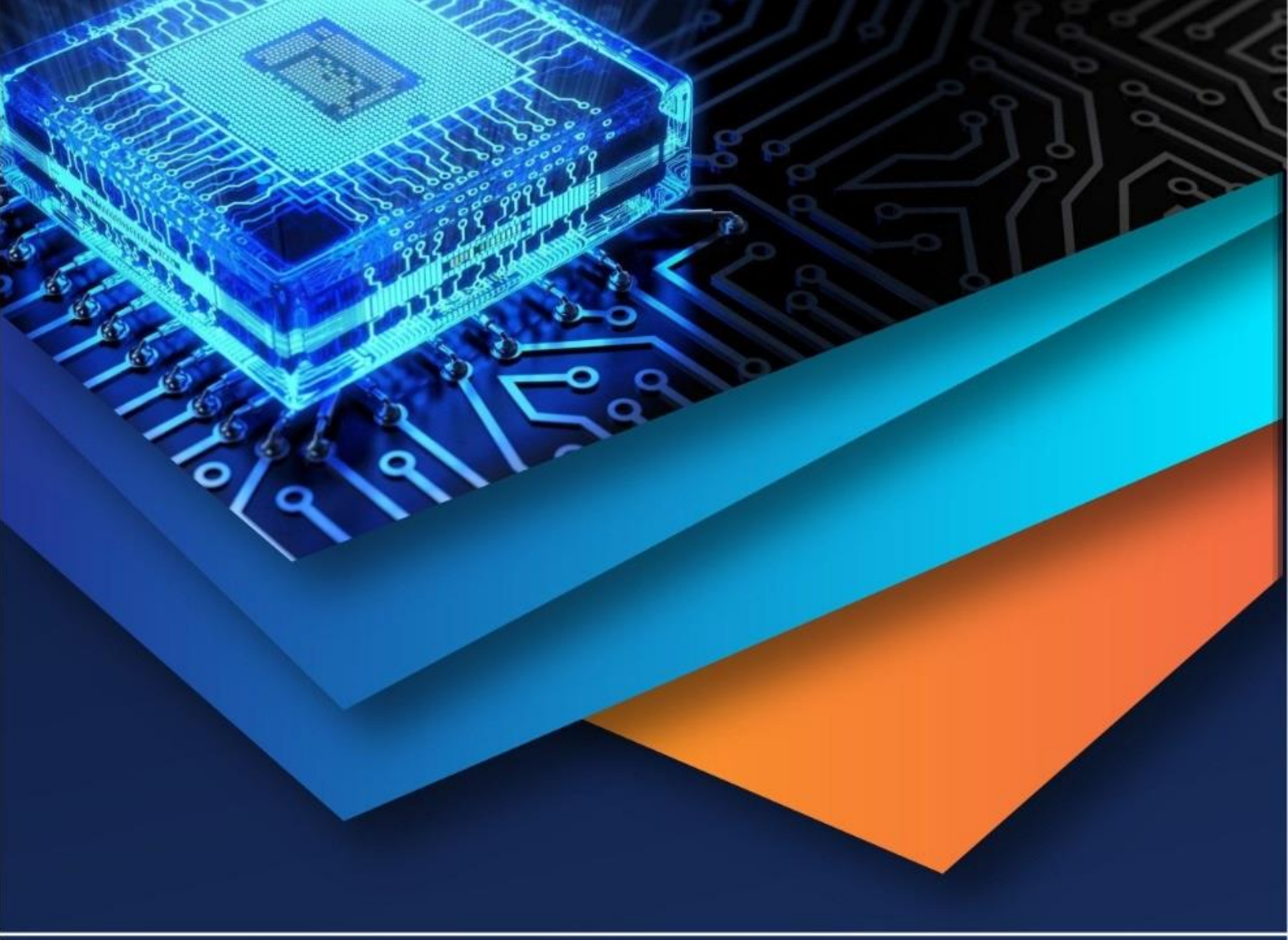

10.22214/IJRASET

45.98

IMPACT FACTOR: 7.129

IMPACT FACTOR: 7.429

INTERNATIONAL JOURNAL FOR RESEARCH

IN APPLIED SCIENCE & ENGINEERING TECHNOLOGY

Call : 08813907089 (24*7 Support on Whatsapp)