iJRASET
International Journal For Research in Applied Science and Engineering Technology

INTERNATIONAL JOURNAL FOR RESEARCH

IN APPLIED SCIENCE & ENGINEERING TECHNOLOGY

Volume: 7 **Issue:** V **Month of publication:** May 2019

DOI: https://doi.org/10.22214/ijraset.2019.5397

www.ijraset.com

Call: 08813907089 | E-mail ID: ijraset@gmail.com

International Journal for Research in Applied Science & Engineering Technology (IJRASET)
ISSN: 2321-9653; IC Value: 45.98; SJ Impact Factor: 7.177
Volume 7 Issue V, May 2019- Available at www.ijraset.com

Voltage Source Inverter with Three Phase Preventer and Selector for Industrial Application.

Miss. Snehal T.Satav[1], Miss. Ashwini M. Shendkar[2], Miss. Kajal S. Patil[3], Prof. D.D. Khairnar[4]
[1, 2, 3, 4]*Department of Electronics and Telecommunication, JSPM's BSIOTR, Wagholi.*

Abstract*: In this changing industrial world, much of production happens every day which cannot afford failure in that application. Industries are using 3 phase supply so failure of a single phase is unaffordable which will make a failure of machinery or application. The main objective of this research work is to operate 3 phase appliances in failure of single phase. This operation can be achieved with the help of microcontroller programming and MOSFET based inverter circuitry. To drive that inverter circuit and signal amplifiers, we have used a special 4 winding transformer which reduces the cost and space required for placing 6 normal 12V transformer. Transformer looks like a normal transformer but change is secondary winding is divided into six 12V windings and that are connected to gate drivers. If we see in market, the cost of inverter is more as compare to this MOSFET based inverter circuit. So, here is an attempt to generate three phase power supply in absence of single phase.

Keywords: Automatic phase selector, Special four winding transformer, MOSFET Inverter circuit, Gate driver, DIP switches.

I. INTRODUCTION

As the technology is growing day by day, every field is using automation. This automation is carried out with the help of 3 phase electric supply.

Electricity is most essential part in each industrial work. But due to some environmental and climatic conditions this is prone to failure. If there is failure of a single phase for a single minute then industries have to face much problems. So, to avoid this situation we have designed a system which will operate the 3 phase appliances on single phase. Generation of three phase from single phase is achieved by MOSFET Inverter circuitry. This uses controlled turn-on and turn-off devices like BJT's, MOSFET's or IGBT's, We have used MOSFET's. If we see in market the cost of Inverter is more, we have designed this inverter with low cost.

A. Basics of Inverter

Inverter is basically an electronic device which is used for converting D.C power into A.C. with use of switching circuits like BJT's, MOSFET's, IGBT's. MOSFET is used in this research work for inverter operation. The output of this ideal inverter is in the form of Sine Wave[8].But in practically, the effect of harmonics at output it generates non-sinusoidal waveform.For low-medium applications square or quasi square waveform is acceptable, for handling high power applications less distorted sinusoidal waveform is required.

B. Classification of Inverter

Inverters are categorised as: i. Voltage Source Inverter(VSI) ii. Current Source Inverter(CSI) .In VSI the fixed and ripple free voltage is applied to input and in case of CSI, first voltage source is converted into current and given as input to Inverter circuit[9]. Again, inverters are classified based on their nature as: i. Square wave inverter ii. Quasi square wave inverter iii.Pulse width modulated (PWM) inverter. The output of Square wave inverter is square wave with ac voltage of constant magnitude and this voltage can be varied by controlling the DC input voltage. In last method i.e. PWM, uses a switching scheme to modify the shape of output waveform then voltage is controlled.[5]

II. SYSTEM DEVELOPMENT

The main objective of this system is to generate three phase supply in presence of single phase, because It is the basic need of any industrial appliances. The government has decided for single phasing[7]. But we cannot operate three phase appliances on single phase. This system consists of following components:

A. 89S52 microcontroller
B. 4 winding transformer
C. Automatic phase selector

©IJRASET: All Rights are Reserved

D. Gate driver
E. MOSFET inverter circuit
F. Signal Amplifier
G. 4pole 4way relay
H. Opto-isolator
I. DIP switches

In presence of all 3 phases, supply is directely connected to load or motor. As soon as any phase failure happens the four pole four way relay gets activated and present single phase is rectified with the help of rectifier. The output of bridge rectifier is 350V which is given as input to MOSFET inverter circuit. For this gate driver circuit is needed with 12v input this is amplified and given to inverter circuit, That uses special 4 winding transformer. The secondary winding of transformer is divided into 6 windings each produces 12v output. This is compact and reduces cost as well as complexity of 6 transformers.
The MOSFET's gets turned on with sequence of Q1,Q3,Q5 in first step and Q2,Q4,Q6 in second step[6]. In this way after B phase again cycle repeats to R phase with the help of automatic phase selector circuit. The motor gets connected to the load with this sequence. Microcontroller 89S52 is the heart of the system[7].It generates PWM pulses with DIP switches and generates the frequency of 10Hz to 100Hz with the help of DIP switches. DIP consists of 8 parallel switches. For separating power unit and control unit six Opto-isolators are used.

III. BLOCK DIAGRAM

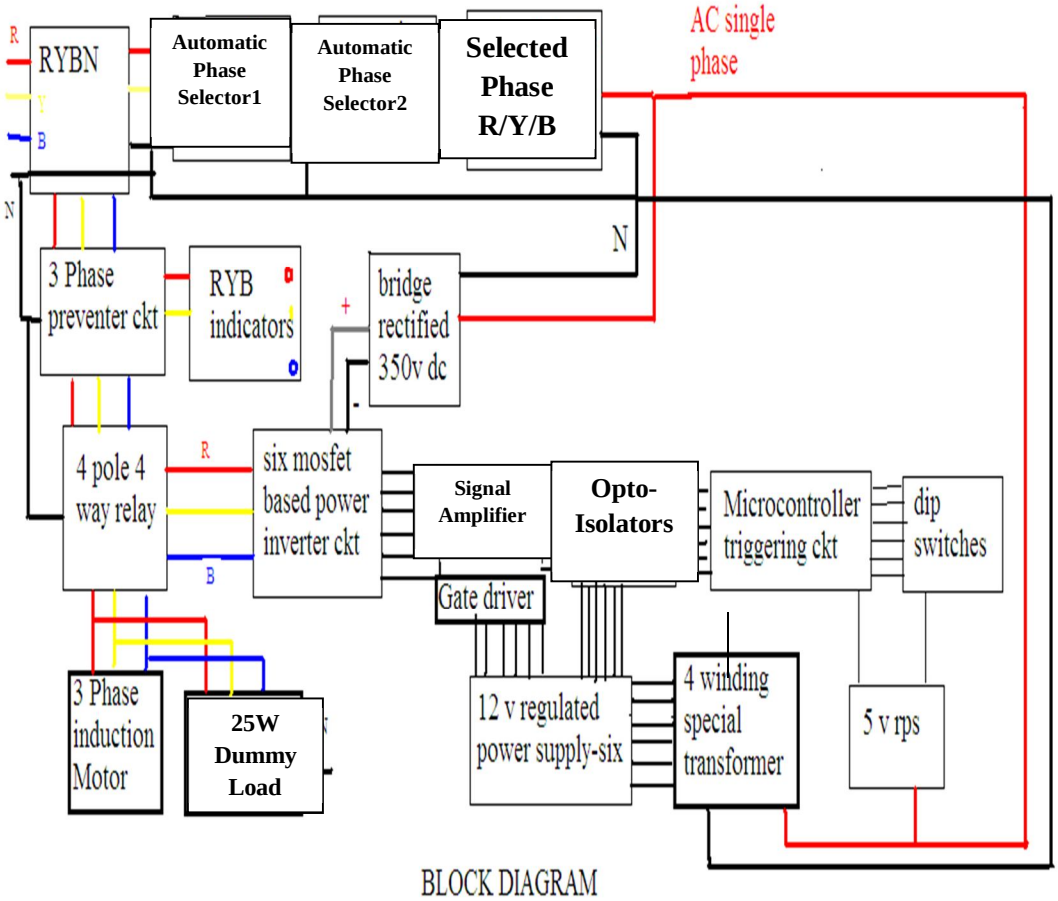

Fig.1. Block Diagram

©IJRASET: All Rights are Reserved

A. Automatic Phase Selector

This circuit makes use of rectifier, filter and relay. This is having two blocks automatic phase selector 1 and automatic phase selector 2. 'R' phase connected to NC and 'Y' connected to NO of relay of automatic phase selector 1. 'B' is connected to NC of automatic phase selector 2 and 'N' connected to common[4].

This works according to failure of any phase. If relay is activated then and then only 350VDC rectifier will come in picture to provide input to Inverter circuit.[10]

B. Rectifier

It consist of capacitor and diodes. It is having input 230Vac from present phase .The diodes are connected in bridge configuration and will generate 350VDC output voltage. Output is connected to inverter as input.

C. Micro-Controller

In this research paper uses microcontroller 89S52.It is 8-bit Microcontroller with PWM support. It generates six PWM output pulses in both modes 1200 and 1800. DIP switches are used for PWM frequency. This are used as input to microcontroller with 8 parallel switches.

The output of DIP switches is given to microcontroller to generate various frequency ranges from 10Hz to 100hz for selection of mode of operation.

D. DIP Switches

The output of 8 parallel DIP switches are connected to port 1 of microcontroller to generate frequency as well as select mode of operation. They works as follows:

1) SWITCH 1: To turn on or off the whole DIP.
2) SWITCH 2: it is used to select the 1200and 1800 mode of inverter.
3) SWITCH 3: MASKED.
4) SWITCH 4: MASKED.
5) SWITCH 5, 6, 7, &8: Used to generate variable frequency.

E. Optoisolator

It is used for isolation of control unit and power unit. Control unit works on 5V and power unit operates on 350VDC. So to avoid damage six optoisolators are used[2].

F. Signal Amplifier

It consist of transistor- Darlington pair with resistors. The output of optoisolator is not sufficient to drive the MOSFET inverter circuit. So output of optoisolator is amplified and applied to Gate terminal of MOSFET.

G. RYB Indicator

This is used for present phase indication purpose. It uses three LED's named as R,Y,B. It gets turned ON according to present phase.

H. Inverter Circuit

It deals with power device called MOSFET. MOSFET stands for Metal Oxide Semiconductor Field Effect Transistor.It is voltage controlled device.

It has DC input voltage from rectifier and output in the form of AC voltage[1]. Inverter circuit uses 6 MOSFET's connected in bridge configuration. It generates output in RYB phase sequence. Inverter having 2 modes of output with180^0 and120^0. 180^0 means phase voltage is in six steps and line voltage is quasi-square wave. In 120^0 conduction mode with six step square waveform. Lastly, the 3phase AC output voltage is given to motor or any 3phase load.[3]

I. Special Four Winding Transformer

This transformer is like normal 12v step down transformer. It is having 230v AC input at primary winding. The secondary winding is divided into six windings. This saves cost as well as space required to six transformers. This output is used as input to gate driver circuit.

©IJRASET: All Rights are Reserved

IV. RELEVANCE OF RESEARCH WORK

This research work is relevant in applications like thermal power plants, chemical plants, some controlling and monitoring applications. This system is useful in rural areas for farming appliances where it is needed. In villages there is problem of phase failure, in this case this system is very useful as it's having very low cost and it can affordable to people. Again, this is useful in all industrial applications because most of the industries are using 3 phase supply. It is beneficial for home appliances as well as commercial applications.

A. Hardware Setup

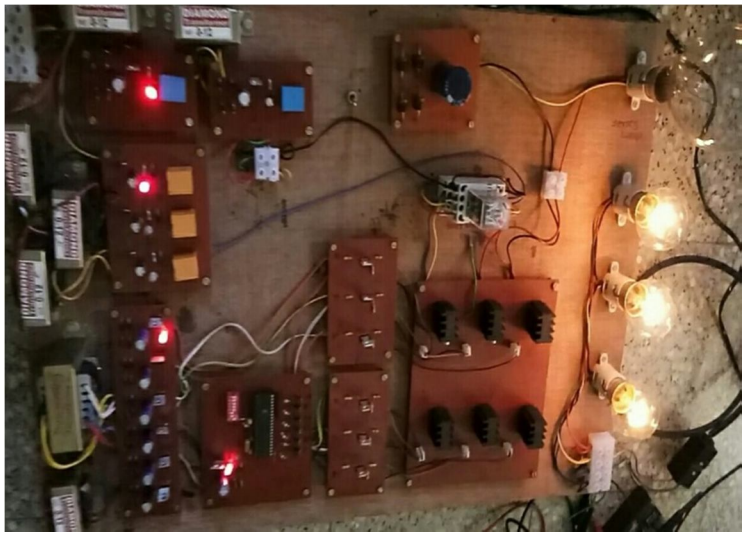

Fig.2.Hardware setup

V. RESULT ANALYSIS

Microcontroller 89s51 generates PWM pulses and given to opt isolator. This optoisolator is used for isolation between the control unit and power unit. Gate driver having voltage of 3.4v across the output of signal amplifier. Signal amplifier TIP-122 is uses darling tone pair transistor which is used for current boosting in circuit with Frequency is 50Hz.

1) *Line Voltage:* The Voltage across any two lines is called as line voltage. The line voltage is given in following table:

TABLE .I

LINE VOLTAGE

Parameters	Line Voltage
VRY	245
VYB	248
VRB	255

2) *Phase Voltage:* The Voltage across the line with refering to the Neutral point is known as phase voltage. VRN = VYN =VBN = Phase voltage = VPH. Practically phase voltage is given as:

TABLE. IIIII

PHASE VOLTAGE

Parameters	Phase voltage
VRN	116
VYN	117
VBN	129

©IJRASET: All Rights are Reserved

The waveforms square measure shown below:

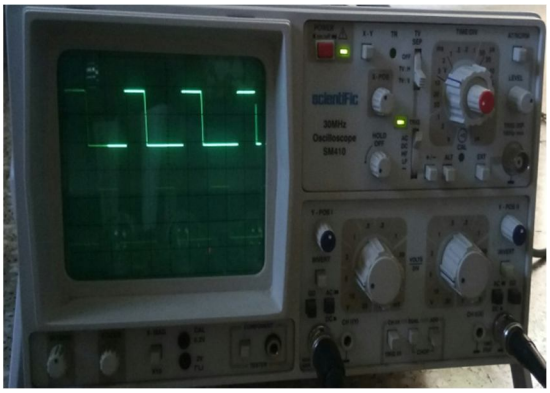

Fig.3.Gate Drive Output

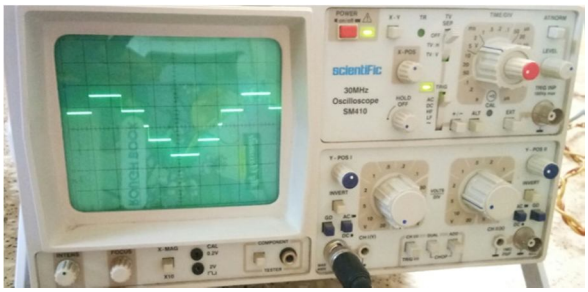

Fig.4.Output Voltage wave shape

VI. ACKNOWLEDGEMENT

This research work won't accomplished while not facilitate from my guide Prof.D.D.Khairnar. At the commencement, I want to specific my feeling to my analysis work guide for his support and constant encouragement.I will not able to create this technique with success without his guidance. Again I am thankful to Dr.Y.S.Angal,(HOD)Electronics & Communication Department for his motivation & guidance all the time. At last I would like to thank my parents. I am additionally glad to my friends who have helped me to complete this analysis work.

VII. CONCLUSION

The system is built successfully with the help of automatic phase selector and microcontroller. This acts as heart of the system. It provides continuous power supply to the load. The main objective of this system is to generate three phase supply from single phase is done successfully.

REFERENCES

[1] P. Hammond, “A new approach to boost power quality for medium voltage AC drives,” IEEE Trans. Industrial Applications., vol. 33, pp.202–208,Jan./Feb. 1997.
[2] Mr. G. Pandian and Dr. S.Rama Reddy “Implementation of structure of Multilevel Inverter-Fed InductionMotor Drive”, journal of industrial Electronics, Vol.24(June 2008).
[3] R. J. Kerkman, B. J. Seibel, D. M. Brod, T. M. Rowan, and D.Leggate, “A simplified electrical inverter model for on-line management and simulation,” IEEE Trans. Ind. Application., vol. 27, no. 3, pp. 567–573,1991.
[4] Gua-Kiang Hung, Chih- chang Chang, “Automatic Phase Shift Methodology for Islanding Detection of Grid –Connected Photovoltaic Inverters,” IEEE Transaction On Energy conversion, Vol.18.No.1, March 2003.
[5] J.Rodriguez, J.S. Lai, Fang Z. Peng, Multilevel structure Inverters: A Survey of Topologies, Controls and Applications - IEEE Trans on Industrial Electronics, Vol. 49, No 4, pp 724 –738, 2002.
[6] Mohammad H.Rashid, Power Electronics Circuits and Devices & Applications. 2nd Edition Prentice Hall of India Pvt.Ltd.,1996.
[7] H. N. Hickok, “Adjustable speed—A tool for saving energy losses in pumps, fans, blowers, and compressors,” IEEE Trans. Ind. Applicat.vol. IA-21, pp. 124–136, Jan./Feb. 1985.
[8] C.-T. Pan, T.-C. Chen, and C.-M. Hung, “A low cost voltage-fed current controlled electrical inverter for induction motor drives,” in Conf. Rec. IEEE Int. Symp. Industrial Electronics, 1993, pp. 434–439.
[9] H.W. Van Der Broeck and J. D. VanWyk, “A comparative investigation of a three-phase induction machine drive with a component minimized voltage-fed electrical inverter under different control options,” IEEE Trans. Ind. Applications., vol. IA-20, pp. 309–320, Mar./Apr. 1984.
[10] Muhammad ajmalp, “automatic phase changer” 07/ 2007.

©IJRASET: All Rights are Reserved

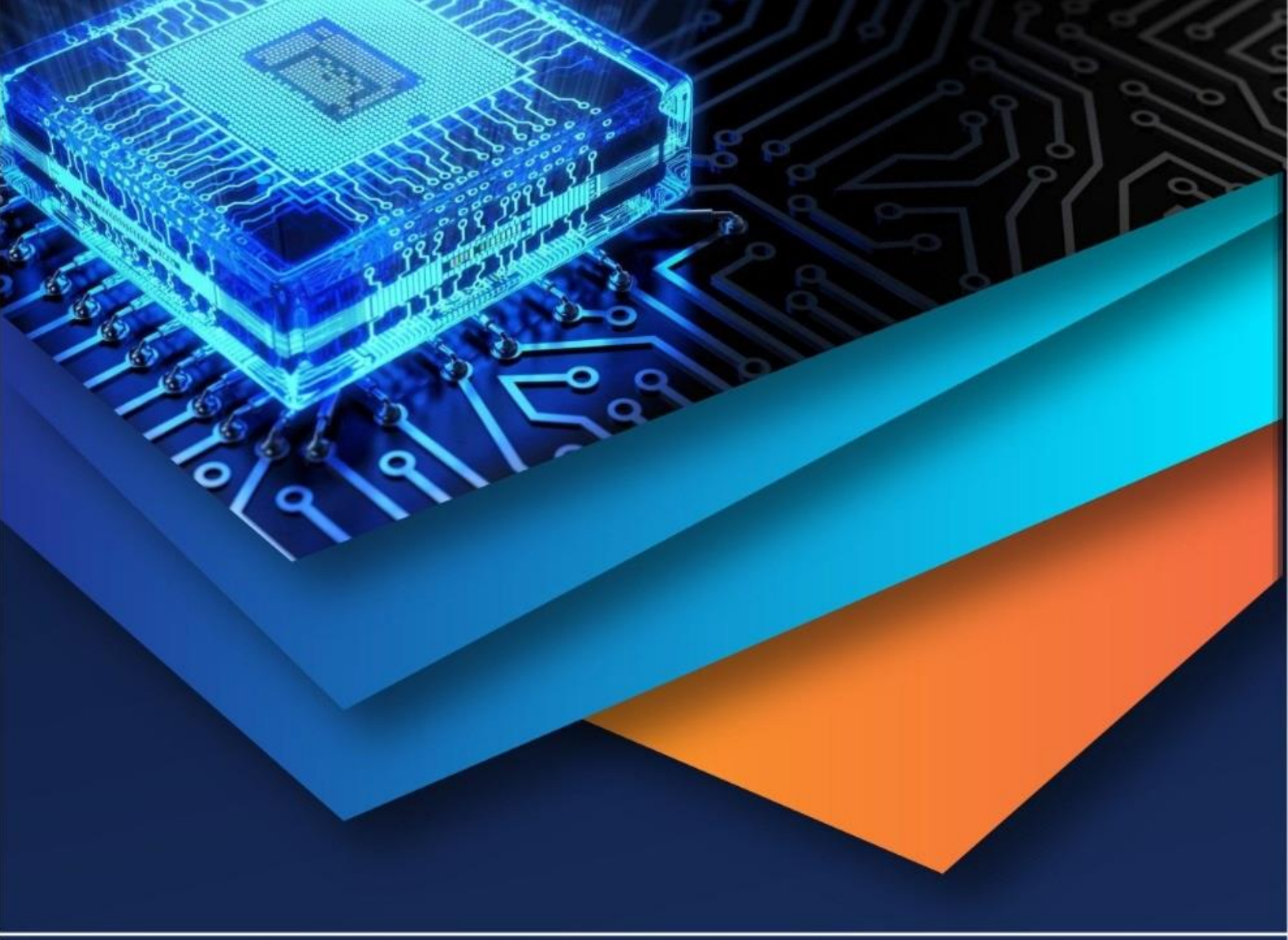

10.22214/IJRASET

45.98

IMPACT FACTOR: 7.129

IMPACT FACTOR: 7.429

INTERNATIONAL JOURNAL FOR RESEARCH

IN APPLIED SCIENCE & ENGINEERING TECHNOLOGY

Call : 08813907089 (24*7 Support on Whatsapp)