iJRASET
International Journal For Research in Applied Science and Engineering Technology

INTERNATIONAL JOURNAL FOR RESEARCH

IN APPLIED SCIENCE & ENGINEERING TECHNOLOGY

Volume: 7 **Issue:** V **Month of publication:** May 2019

DOI: https://doi.org/10.22214/ijraset.2019.5509

www.ijraset.com

Call: 08813907089 | E-mail ID: ijraset@gmail.com

International Journal for Research in Applied Science & Engineering Technology (IJRASET)
ISSN: 2321-9653; IC Value: 45.98; SJ Impact Factor: 7.177
Volume 7 Issue V, May 2019- Available at www.ijraset.com

IOT Based Agricultural Fields Protection from Animals

Dr. Alice Mary Karlapudy[1] Rajasekhara Reddy Kommasani[2], Kalyan Babu Malla[3], Sai Prathyusha Vasam[4]
[1]*Professor, EEE Dept, EEE, GEC, Gudlavalleru, Krishnan Dist, AP, India-521356*
[2, 3, 4]*EEE Dept, GEC, Gudlavalleru, Krishnan Dist, AP, India-521356*

Abstract: Agriculture is the backbone of the economy but because of animal interference in agricultural lands, there will be huge loss of crops. Elephants, monkeys and other animals coming in to contact with humans, impact negatively in various means such as by depredation of crops, damaging grain stores, water supplies, houses and other assets, causing injures and death of humans. Since safety of both human and animal is equally vital, animal detection system is very much essential in farm areas. The main aim of our project is to protect the crops from damage caused by animals as well as to divert the animal without causing any harm.

In this paper, a circuit consisting of internet of things (IOT) based components such as passive infrared (PIR) sensor, raspberry pi, pi camera is proposed. And also, speaker, solar panel, battery, inverter transformer are employed. When the animal enters into the farm area, the PIR sensor detects the presence of an animal and sends an input signal to the Raspberry pi. Then raspberry pi send signal to the farmer and then farmer will be able to turn on the pi camera which will give the live streaming video to the farmer about type of animal. Based on the received live streaming video, farmer will be able to operate the app through his mobile which produces the frightening sounds at the field to divert the animal.

Keywords: Internet of things, Inverter transformer, Solar panel, Battery, PCB, raspberry pi, pi camera, PIR sensor

I. INTRODUCTION

An electric fence usually consists of several conductors of bare wire, supported on insulators and connected to a fence energizer which in turn is connected to a power source. A properly constructed electric fence which is safe to people and animals, there must be a complete and closed circuit. The electrical current must travel from its source through the circuit and back to the source. This flow only occurs when a charged wire of the fence becomes grounded.

Electric fencing is safe, as its output is discrete (not continuous). There is certain time duration between two pulses that prevents prolonged shocking to animals or people. In addition, the short 'on'-time (normally 1/5000th of a second) prevents heat build-up.

This project works on the principle of Inverter transformer. It is designed to generate square wave, which is stepped up to high voltage level and can be connected to the fence. This fence system is powered by a 12V rechargeable battery. A solar panel[1] is connected to the battery to charge on day-time. The battery is charged with AC supply of 230V, 50 Hz. The battery charger circuit is designed to charge the battery in emergency conditions.

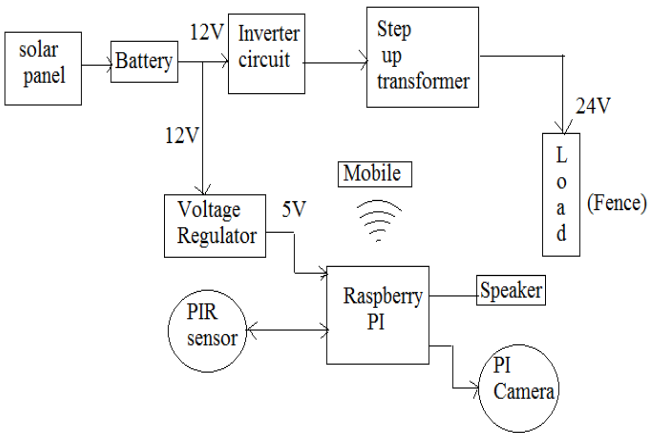

Fig1: Block diagram of the IOT based animal protection

A. Circuit Diagram

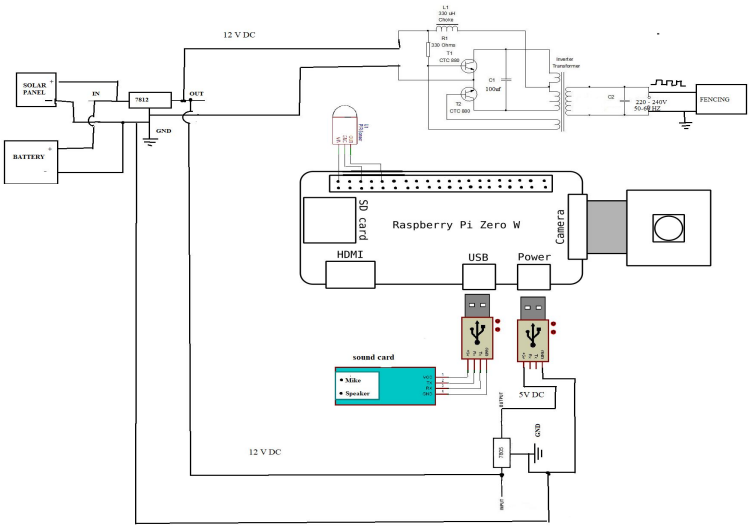

Fig.2.Circuit diagram of the IOT based animal protection.

B. Inverter Transformer

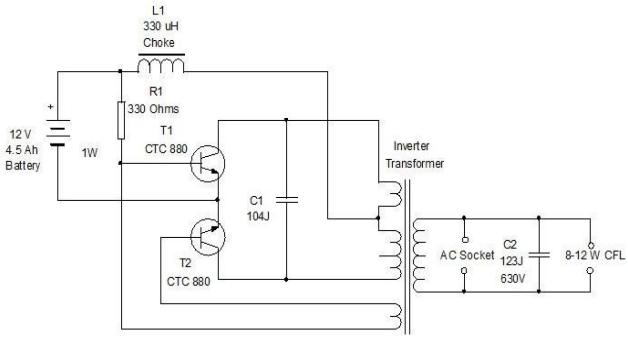

Fig. 3. Inverter transformer

Actually, inverter transformer is also a power transformer. Power transformer is nothing but a step up or step-down transformer. An inverter is a circuit that converts Direct Current (DC) to Alternating Current (AC). But usually inverter does this conversion at a lower voltage. The input voltage, output voltage and frequency, and overall power handling depend on the design of the specific device or circuitry.

C. Fencing

An electric fence [3]is a barrier that uses electric shocks to determine animals from crossing a boundary. The voltage of the shock may have effects ranging from discomfort to death. Most electric fences[2] of use today are for agricultural fencing and other forms of animal control, although they are frequently used to enhance the security of sensitive areas, such as military installations, prisons, and other security sensitive places, places exist where lethal voltages are used.

Fig.4. Animal near the fence

D. Animal Detection System

When the animal enters into the farm area, the PIR sensor detects the presence of an animal and sends an input signal to the Raspberry pi. Then raspberry pi send signal to the farmer and then farmer will able to turn on the pi camera which will gives the live streaming video to the farmer. Based on the received live streaming video farmer will be able to operate the app through his mobile which produces the frightening sounds at the field to divert the animal.

E. PIR Sensor

An individual PIR sensor [6] detects changes in the amount of infrared radiation impinging upon it, which varies depending on the temperature and surface characteristics of the objects in front of the sensor. When an object, such as a human, passes in front of the background, such as a wall, the temperature at that point in the sensor's field of view will rise from room temperature to body temperature, and then back again.

Fig. 5. PIR Sensor

The sensor converts the resulting change in the incoming infrared radiation into a change in the output voltage, and this triggers the detection. Moving objects of similar temperature to the background but different surface characteristics may also have a different infrared emission pattern, and thus sometimes trigger the detector. PIRs come in many configurations for a wide variety of applications. The most common models have numerous Fresnel lenses or mirror segments, an effective range of about ten meters (thirty feet) and a field of view less than 180 degrees. Models with wider fields of view, including 360 degrees are available typically designed to mount on a ceiling. Some larger PIRs are made with single segment mirrors and can sense changes in infrared energy over one hundred feet away from the PIR. There are also PIRs [4] designed with reversible orientation mirrors which allow either broad coverage (110° wide) or very narrow "curtain" coverage or with individually selectable segments to "shape" the coverage.

F. Raspberry pi

The Raspberry Pi[5] is a series of credit card- Sized single-board. The original Raspberry Pi is based on the Broadcom BCM2835 system on a chip (Soc),which includes an ARM1176JZF-S700 MHz processor, Video Core IV GPU and was originally shipped with 256 megabytes of RAM later up graded (models B and B+) to 512 MB. The system has Secure Digital (SD) (models A and B) or Micro-SD (models A+ and B+) sockets for boot media and persistent storage and MMC flash chip into a module for use as a part of embedded systems.

Fig. 6. Raspberry PI

G. Pi camera

The Raspberry Pi Camera Module is a custom designed add-on for Raspberry Pi. It attaches to Raspberry Pi by way of one of the two small sockets on the board upper surface. This interface uses the dedicated CSI interface, which was designed especially for interfacing to cameras. The CSI bus is capable of extremely high data rates, and it exclusively carries pixel data. The board itself is tiny, at around 25mm x 20mm x 9mm. It also weighs just over 3g, making it perfect for mobile or other applications where size and weight are important. It connects to Raspberry Pi by way of a short ribbon cable. The camera is connected to the BCM2835 processor on the Pi via the CSI bus, a higher bandwidth link which carries pixel data from the camera back to the processor. This bus travels along the ribbon cable that attaches the camera board to the Pi. The sensor itself has a native resolution of 5 megapixel, and has a fixed focus lens onboard. In terms of still images, the camera is capable of 2592 x 1944-pixel static images, and also supports 1080p30,720p60 and 640x480p60/90 video.

Fig. 7. Raspberry Pi Camera

H. Working

The basic working of the fencing is as follows. Photovoltaic energy from the sun is absorbed with the help of solar panels which are made up of photovoltaic cells. These photovoltaic (PV) cells are used to convert solar energy to electrical energy. This energy is stored in batteries through charge controller during the day time in order to be utilized whenever required. The Inverter produces square wave pulses. This square wave is stepped up to high voltage level and can be connected to the fence. This way the fence is electrified and animals touching the fence receive the shock. Due to high voltage shock to the animals touching the fence, animals keep away from the fence and field is protected. A DC 12V supply from solar panel is adjusted to get 5v using 7805 voltage regulator. This 5v signal turn on the raspberry pi(IOT devices)[7] to our mobile through mobile hotspot. Once the Raspberry PI is connected to our mobile then we need to check the VNC viewer app which is installed in our mobile in which we get the desktop of raspberry pi which is far away from us. This desktop contains all the features of PC. So it acts as a mini computer in our mobile. From the raspberry pi we will connect the PIR sensor which will act as motion detector. PIR sensor will give the signal to the Raspberry PI as an alert to our mobile; hence we need to go for Blynk app which will communicate the animal detected signal from raspberry pi to our mobile. Once the signal is obtained then we will be able to turn on the PI Camera which is connected to Raspberry PI by giving the command signal in the VNC viewer server then pi camera will be on and it will give the live streaming of the animal in VLC media player. Depending upon the animal, farmer will be able to produce the frightening sounds through VNC viewer which will divert the animals. Even though the animal tries to enter in to the field the electrical fence will give the shock to them but it does not cause any death to it. So by using the above system we successfully monitor and protect our crops even from remote areas which is very helpful to the farmers.

1) Advantages

a) Eco friendly
b) Durability
c) Long life
d) Human and animal safety
e) Low running cost

2) Applications

a) Agricultural fields and plantation sectors
b) Domestic applications
c) Industrial applications

II. CONCLUSION

This paper titled 'IOT based agricultural field's protection from animals' is based upon the concept of renewable solar energy. It uses solar energy to power the fencing around our fields so that animals are not able to enter and destroy our crops. Solar energy is a resource that is not only sustainable for energy consumption, it is indefinitely renewable (at least until the sun runs out in billions of years). Through the animal detection system which is mentioned above the farmer can protect his crop even from the remote places also by operating from his mobile with the use of internet of things. This is very useful to the farmers to protect the crops from the animals.

REFERENCES

[1] http://www.ijircce.com/upload/2016/december/35_Solar.pdf.
[2] http://www.vishwasolar.co.in/solar-powerfence.html.
[3] M. G. B. De Martino, F. S. Dos Reis, and G. A. D . Dias, "An electric fence energizer design method," in Proc. IEEE Int. Symp. Industrial Electronics, Conf., 2006.
[4] Artur Frankiewicz, Rafał Cupek."Smart Passive Infrared Sensor -Hardware Platform" IECON 2013 - 39th Annual Conference of the IEEE Industrial Electronics, 2013,pp- 7543 – 7547
[5] Stefano Giordano, llias seitanidis, mike ojo, davide adani, Fabio vignole, "IOT solutions for crop protection against wild animal attacks", IEEE internationalconference on environmental engineering (EE),2018.
[6] Balaji Bhanu, Raghava Rao, J.V.N. Ramesh, Mohammed Ali Hussain, "Agriculture Field Monitoring and Analysis using Wireless Sensor Networks for improving Crop Production", Eleventh International Conference on Wireless and Optical Communications Networks (WOCN), 2014.
[7] D. K. Sreekantha, Kavya A. M. "Agricultural crop monitoring using IOT", IEEE, 11th international conference on intelligent systems and control(ISCO),2017

AUTHORS

1. Dr. Karlapudy Alice Mary is currently working as a Professor in EEE Dept. GEC, Gudlavalleru, A.P. She received BE degree in Electrical Power Engineering from Govt. B.D.T College of Engineering & Technology Davanagere, Karnataka, India, ME in Power Electronics and Drives from University of Roorkee U.P. India and Ph.D from IIT, KGP, W.B. India. She has 38 years of teaching experience, worked at different levels as Director of outreach program and Principal of three various engineering institutions and published around 85 papers(national and international). She is a recipient of 16 awards (national and international). Her research interests include Control System Applications to Power Electronics and Machine Drives and produced 3 PhD scholars.

2. Rajasekhar reddy Kommasani: Completed BTech(EEE) at Gudlavalleru engineering college, Gudlavalleru, Krishna district, A.P

3. Kalyan babu Malla: Completed BTech (EEE) at Gudlavalleru engineering college, Gudlavalleru, Krishna district, AP.

4.Sai Prathyusha Vasam: Completed BTech(EEE) at Gudlavalleru engineering college, Gudlavalleru, Krishna district, A.P

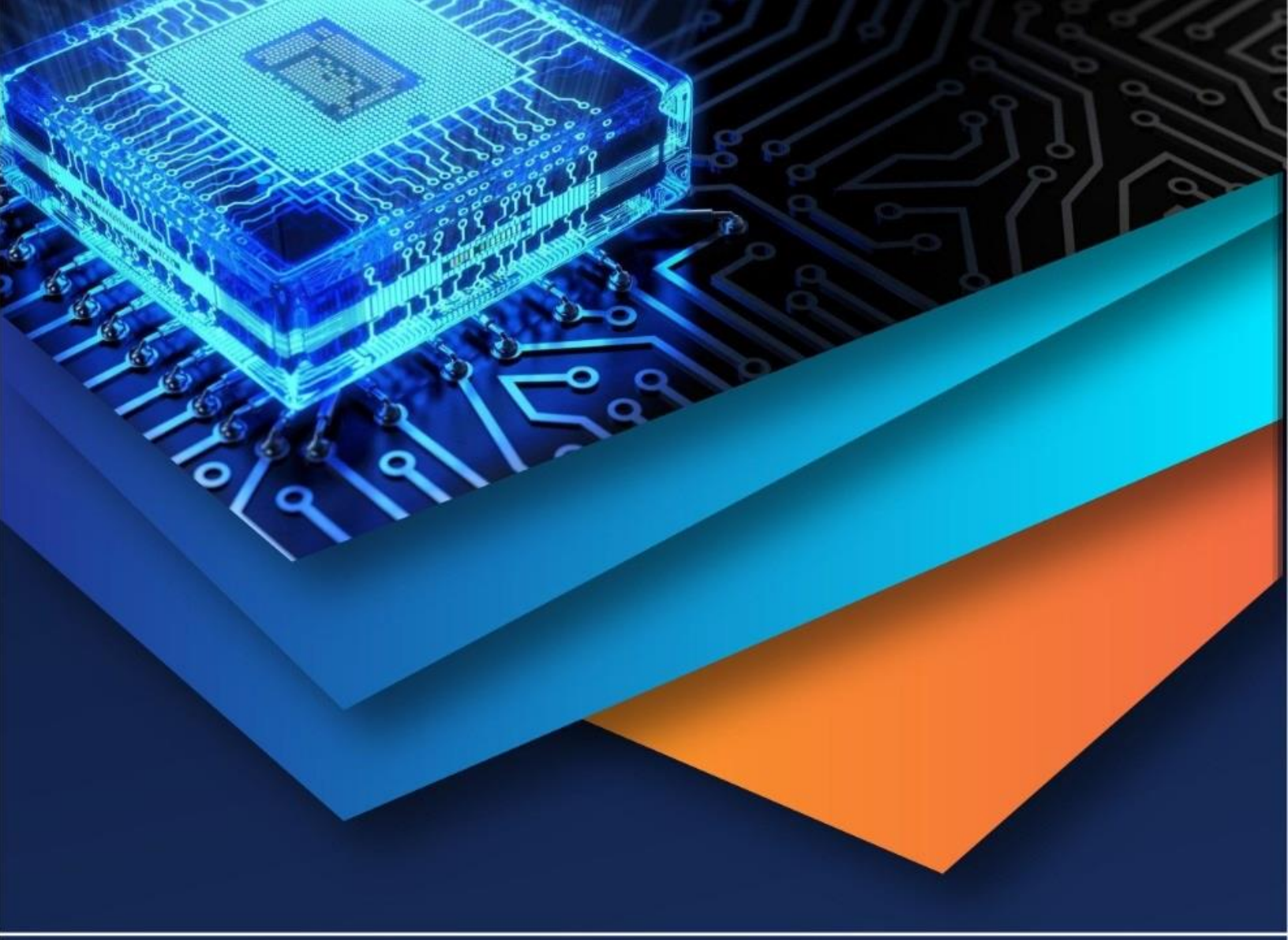

10.22214/IJRASET

45.98

IMPACT FACTOR: 7.129

IMPACT FACTOR: 7.429

INTERNATIONAL JOURNAL FOR RESEARCH

IN APPLIED SCIENCE & ENGINEERING TECHNOLOGY