iJRASET
International Journal For Research in Applied Science and Engineering Technology

INTERNATIONAL JOURNAL FOR RESEARCH

IN APPLIED SCIENCE & ENGINEERING TECHNOLOGY

Volume: 7 **Issue:** V **Month of publication:** May 2019

DOI: https://doi.org/10.22214/ijraset.2019.5528

www.ijraset.com

Call: 08813907089 | E-mail ID: ijraset@gmail.com

International Journal for Research in Applied Science & Engineering Technology (IJRASET)
ISSN: 2321-9653; IC Value: 45.98; SJ Impact Factor: 7.177
Volume 7 Issue V, May 2019- Available at www.ijraset.com

An Emerging Technology in IOT Smart Energy Grid

Mr. Sidarath Bhat[1], Snehal V. Dawange[2], Swati N. Yelmame[3], Prof. S. M Turakane[4]
[1, 2, 3]BE. Student, [4]Assistant Professor, Department of Electronics and Telecommunication Engineering, PREC, Loni, SPPU, Pune

Abstract: ***Today's alternating current power grid evolved after 1896, based in part on Nikola Tesla's design published in 1888 (see War of Currents). At that time, the grid was conceived as a centralized unidirectional system of electric power transmission, electricity distribution, and demand-driven control.***

In the 20th century power grids originated as local grids that grew over time, and were eventually interconnected for economic and reliability reasons. By the 1960s, the electric grids of developed countries had become very large, mature and highly interconnected, with thousands of 'central' generation power stations delivering power to major load centres via high capacity power lines which were then branched and divided to provide power to smaller industrial and domestic users over the entire supply area. The topology of the 1960s grid was a result of the strong economies of scale of the current generation technology: large coal-, gas- and oil-fired power stations in the 1 GW (1000 MW) to 3 GW scale are still found to be cost-effective, due to efficiency-boosting features that can be cost effectively added only when the stations become very large.

A smart grid is a digitally enabled electrical grid that gathers, distributes, and acts on information about the behavior of all participants (suppliers and consumers) in order to improve the efficiency, importance, reliability, economics, and sustainability of electricity services

Keywords: electric power transmission, electricity distribution, high capacity power, powerstations,cost-effective,smartgrid,efficiency,importance,reliability, economics., Etc.

I. INTRODUCTION

The term smart grid has been in use since at least 2005, when it appeared in the article "Toward A Smart Grid" of Amin and Wallenberg. The term had been used previously and may date as far back as 1998. There are a great many smart grid definitions, some functional, some technological, and some benefits-oriented. A common element to most definitions is the application of digital processing and communications to the power grid, making data flow and information management central to the smart grid. Various capabilities result from the deeply integrated use of digital technology with power grids, and integration of the new grid information flows into utility processes and systems is one of the key issues in the design of smart grids. Electric utilities now find themselves making three classes of transformations: improvement of infrastructure, called the *strong grid* in China; addition of the digital layer, which is the essence of the *smart grid*; and business process transformation, necessary to capitalize on the investments in smart technology. Much of the modernization work that has been going on in electric grid modernization, especially substation and distribution automation, is now included in the general concept of the smart grid, but additional capabilities are evolving as well.

Smart grid refers to the next generation electric power network that makes use of IT and high technologies. Compared to the telecommunication network, the electric power network has not developed remarkably in terms of creating innovative technologies. However, smart grid by revolutionizing the electric power network and being almost as powerful as the internet, is attracting many attentions among various industries.

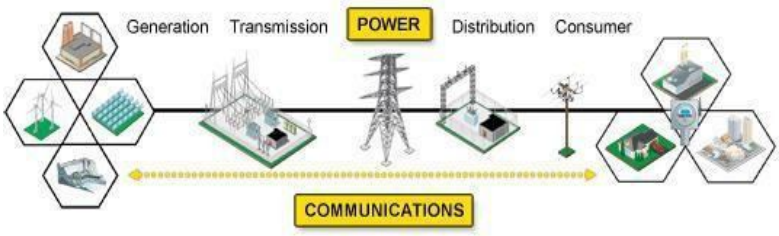

©IJRASET: All Rights are Reserved

Smart grid is a system that enables two-way communications in between consumers and electric power companies. In a smart grid system consumer's information is received by the electric power companies in order to provide the most efficient electric network operations. In addition to the efficient operations of a power plant, smart grids also make it possible to control power demand and distributed energy, including renewable energies. By installing an intelligent meter (smart meter) on the consumer side, especially households, monitoring the use of energy becomes much easier and even helps to reduce carbon dioxide emissions.

A smart grid delivers electricity from supplier to consumers using two- way digital technology to control appliances at consumers homes to save energy, reduce cost and increase reliability and transparency. It overlays the electricity distribution grid with an information and net metering system. Power travels from the power plant to your house through an amazing system called the power distribution grid. Such a modernized electricity networks is being promoted by many governments as a way of addressing energy independences, global warming and emergency resilience issues. Smart meters may be part of smart grid, but alone do not constitute a smart grid.

II. THEORY

The utilities get the ability to communicate with and control end user hardware, from industrial- scale air conditioner to residential water heaters. They use that to better balance supply and demand, in part by dropping demand during peak usage hours.Taking advantages of information technology to increase the efficiency of the grid, the delivery system, and the use of electricity at the same time is itself a smart move. Simply put, a smart grid combined with smart meters enables both electrical utilities and consumer to be much more efficient. A smart grid not only moves electricity more efficiently in geographic terms, it also enables electricity use to be shifted overtime-for example, from period of peak demand to those of off-peak demand. Achieving this goals means working with consumers who have ―smart meters‖ to see exactly how much electricity is being used at any particular time. This facilitates two-way communication between utility and consumer. So they can cooperate in reducing peak demand in a way that it's advantageous to both. And it allow to the use of two way metering so that customer who have a rooftop solar electric panel or their own windmill can sell surplus electricity back to the utility.

A. Intelligent

Capable of sensing system overloads and rerouting power to prevent or minimize a potential outage; of working autonomously when conditions required resolution faster than humans can respond and co-operatively in aligning the goals of utilities, consumers and regulators.

B. Efficient

Capable of meeting efficient increased consumer demand without adding infrastructure.

C. Accommodating

Accepting energy from virtually any fuel source including solar and wind as easily and transparently as coal and natural gas: capable of integrating any and all better ideas and technologies – energy storage technologies. For e.g.- as they are market proven and ready to come online.

D. Motivating

Enable real-time communication between the consumer and utility, so consumer can tailor their energy consumption based on individual preferences, like price and or environmental concerns.

E. Resilient

Increasingly resistant to attack and natural disasters as it becomes more decentralization and reinforced with smart grid security protocol.

F. Green

Slowing the advance of global climate change and offering a genuine path towards significant environmental improvement

III. OBJECTIVES

Understanding the need for smart grid requires acknowledging a few facts about our infrastructure. The power grid is the backbone of the modern civilization, a complex society with often conflicting energy needs-more electricity but fewer fossil fuels, increased reliability yet lower energy costs, more secure distribution with less maintenance, effective new construction and efficient disaster reconstruction. But while demand for electricity has risen drastically, its transmission is outdated and stressed. The bottom line is that we are exacting more from a grid that is simply not up to the task.

©IJRASET: All Rights are Reserved

IV. METHODOLOGY

Smart grid does a lot of works. It is not possible to demonstrate each of the tasks in a single project. So an attempt is made to demonstrate some of its functions like automatic scheduling, power shading, distance controls etc.

A. Description of Loads

1) *Two Simple Houses Representing A Colony:* In case of the colony, the houses are supplied by the main supply. In case of power cut, they are being supplied by the storage which is represented by an UPS. But when the storage discharges fully in case of long power cut, then the colony remains in dark
2) *A Hospital:* In the hospital, since many of the biomedical equipment like breather are running continuously on the electricity, so there is an interruptible need of electric supply. So, for the hospital, an arrangement is made such that if the main supply goes off, then it is being supplied by UPS. When UPS discharges, then it is being supplied by another energy source representing renewable energy source.
3) *An Industry:* In case of Industry, two loads are shown by means of two bulbs. The first load in the industry is its normal load and the second one is extra or overload.

During normal operation, it is being supplied by the main supply. During power cut, it is being supplied by the renewable energy source. In case of overload, a notification is given to the colony or general consumers in form of a buzzer and then after sometime the power is cut in the colony for load shading purpose

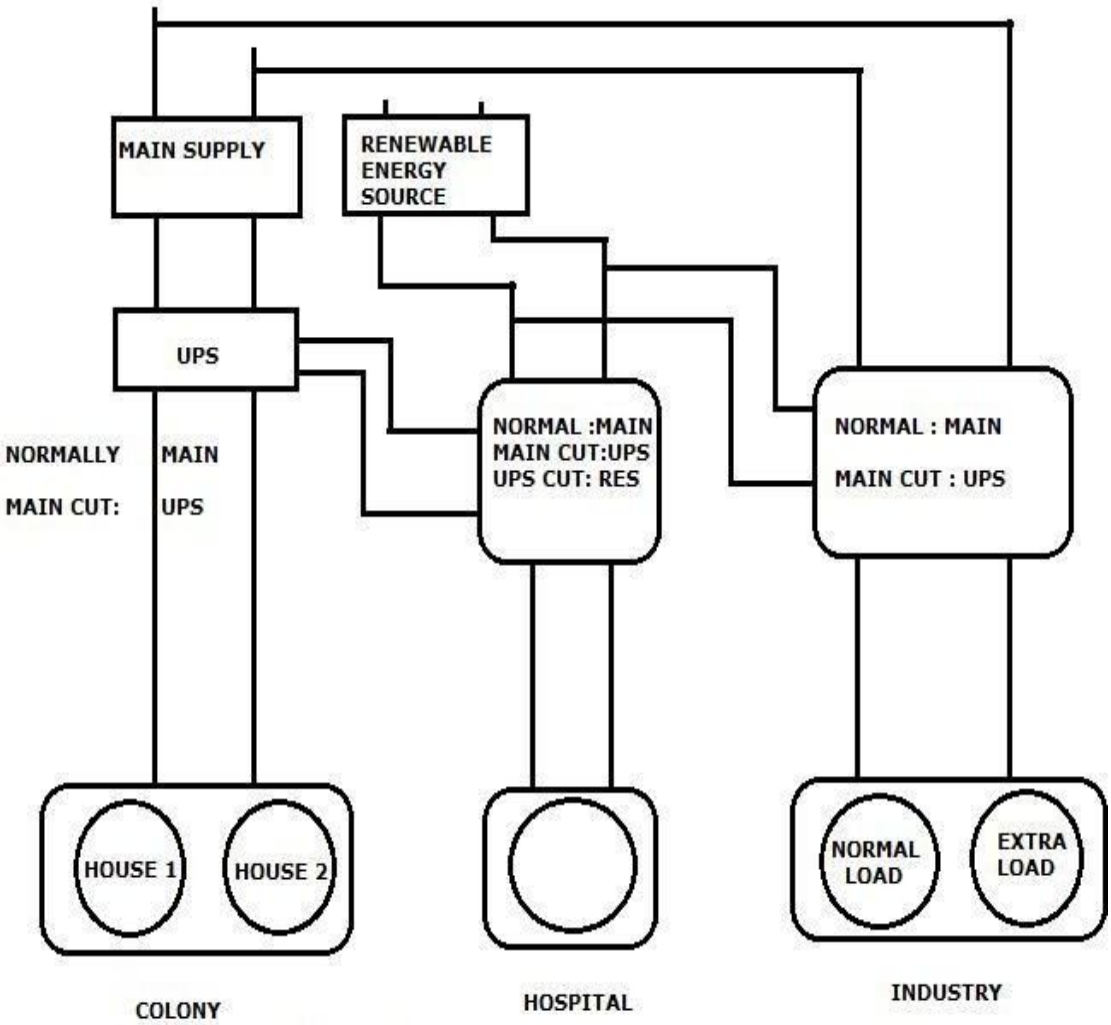

BLOCK DIAGRAM : SMART GRID

©IJRASET: All Rights Reserved

Comparison Between Today's Grid And Smart Grid (Modern Grid)

Characteristics	Today's grid	Smart grid (Modern grid)
1) Self-heals	Respond to prevent further damage. focus is on protection of assets following system faults.	Automatically detects & respond to actual & emerging transmission &distribution problems. Focus is on prevention. minimizes computer impacts.
2) Motivates & includes the consumers	Consumers are uniformed &non-participative with the power system.	Informed involve &active consumers. Broad penetration of demand response.
3) Resist attack	Vulnerable to malicious acts of terrors natural disasters.	Resilient to attach &natural disasters with rapid restoration capabilities.
4) Provided power quality for 21st century needs	Focused on outstage rather than power quality problems. Solve response in revolving PQ issues.	Quality of power meets industry standards & consumers need. PQ issues identified &revolved prior to manifestation. Various levels of PQ at various prices.
5) Accommodates all generation and storage option.	Relatively small no. of large generating plants. numerous obstacles exist for interconnecting DER.	Very large no. of diverse distributed generation & storage devices deployed to complements the large generating plant.

©IJRASET: All Rights are Reserved

V. SIGNAL COND. BLOCK OF VOLTAGES AND CURRENT:

While measuring voltages and current with the help of microcontroller, proportional DC analog voltage is applied to its ADC. Initially AC voltages or current (step down) by CT or PT, which is converted into DC. Capacity of CT and PT will depend upon load handling capacity and mains supply available. In our project work 5A/50 ma CT is used to sense the load current, which is connected in series with load. 230V to 6V or 9V or 12V PT may be used to measure the voltage. If input voltage is greater than 300V then special PT is used to withstand for 440V.

Current capacity of PT is not important. Current capacity of PT up to 300 ma is suitable. In case of PT voltages ratio of primary and secondary is linear. In case of CT current ratio is important. Secondary current is directly proportional to primary current. Current ratio will depend upon the number of turns for secondary and primary. The maximum secondary current will decide the value of Burdon resistor and required voltage across Burdon resistor.

As shown in circuit, important blocks are, first one is precision rectifier and second one is active low pass filter. First block of the hardware is attenuator using 1K and 10K trim-pot. The required amount of input is applied to the rectifier block with the help of trim-pot. Calibration of voltages or current is achived by varying 10K trim pot. Gain of the precision rectifier will depend upon feedback resistance and input resistance (R1). In present hardware selected R1 is 150K and feedback resistor is 220K. Ratio of these two will provide the gain of 1.33. Advantages of precision rectifier are that, it will overcome the problem of nonlinear char. of rectifier diode. Precise op amp 0P07 is used for this purpose. The active low pass filter circuit is designed using op amp 0P07 and RC filter circuit. Our line frequency is 50 Hz. Time period t of cycle is 20 m sec, the time constant of filter circuit is very small than t hence circuit will act as a low pass filter. the output of filter circuit is pure DC and directly proportional to the input AC voltages or AC current of the system. The DC output of this block is applied to ADC of microcontroller as shown in circuit diagram.

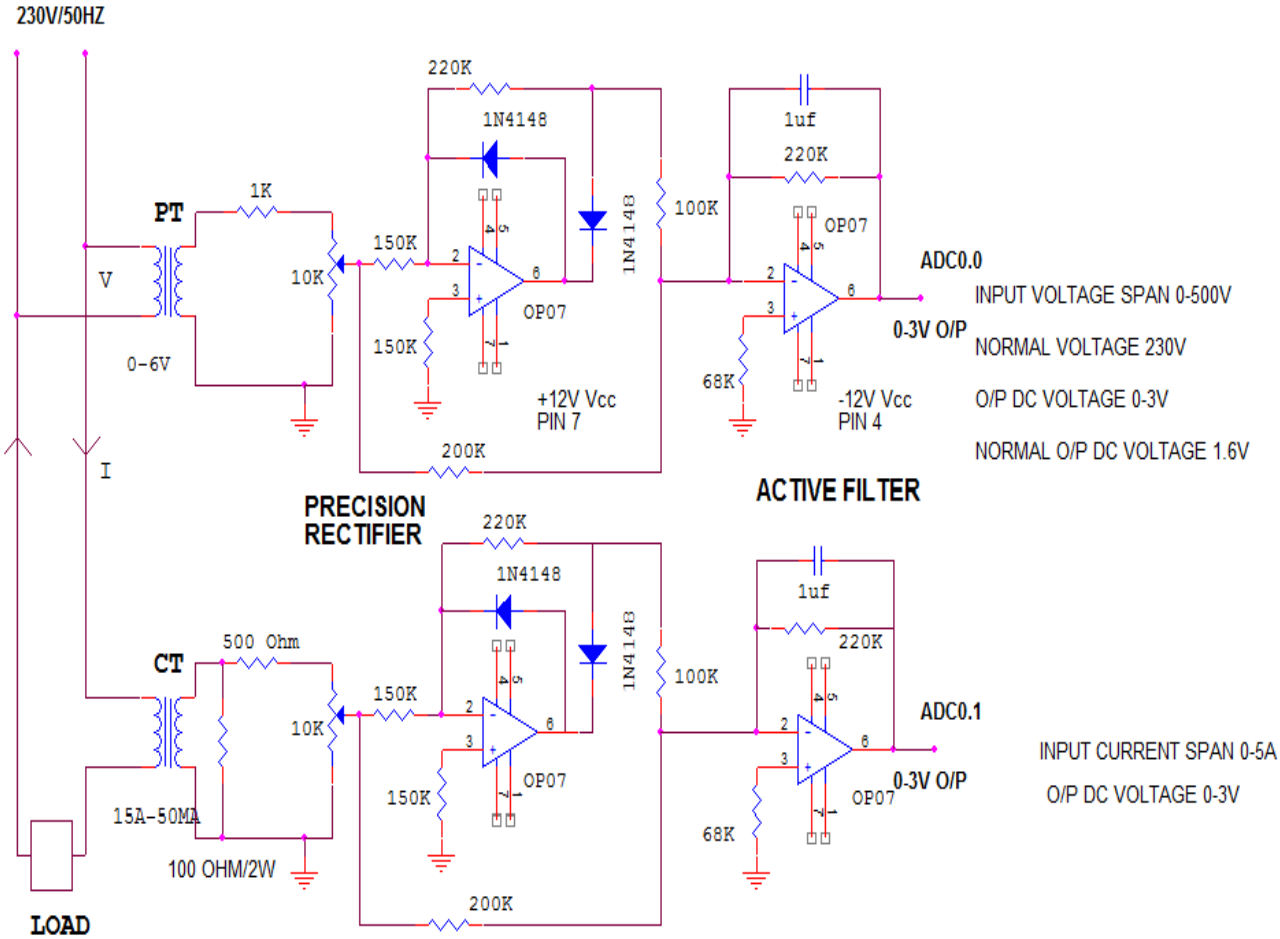

FIG 5: AC Voltage and Current Measurement Signal Cond.

©IJRASET: All Rights are Reserved

VI. BLOCK DIAGRAM

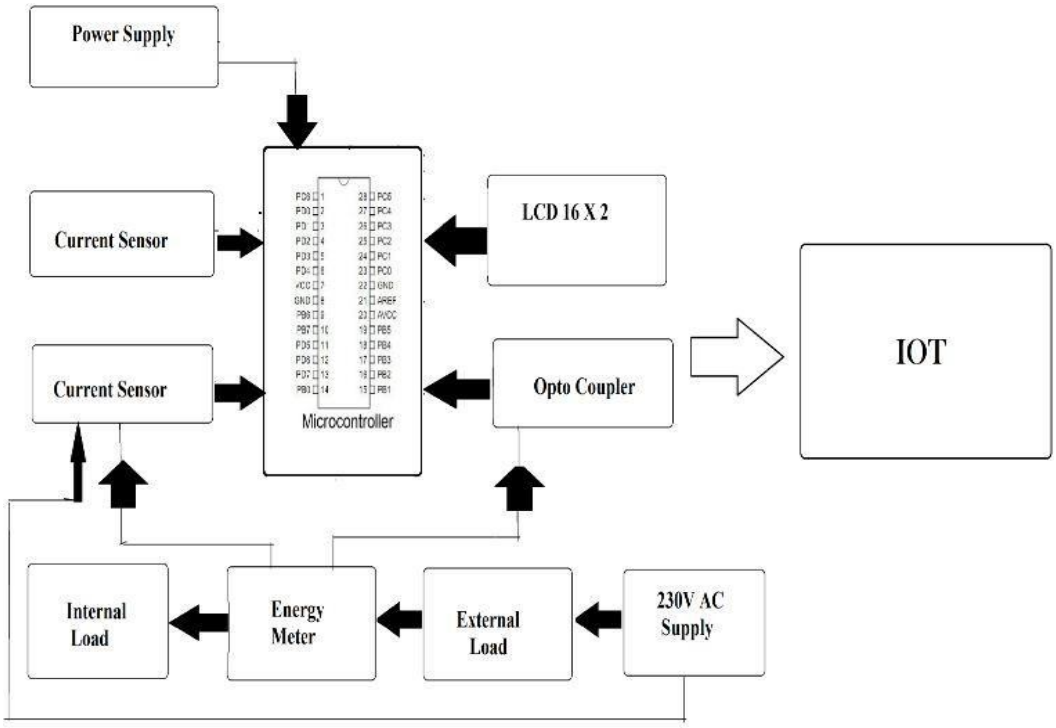

VII. CONCLUSION

This paper presents a conceptual model for the smart grid within the IoT concept. Appliances and devices are considered objects. Each object is assigned an IP address based on the 6LowPAN communication protocol. The major contribution of this work is that one communication protocol is utilized rather than many other protocols such as Zigbee, WiFi, Bluetooth, WiMax, LTE, PLC and lease lines. This is a conceptual model and it is a work in progress. The authors are in the process of implementing this model in smart grid applications in residential area.

REFERENCES

[1] Energy Conservation Through Energy Management by Prof. S. P. Rath (IEEMA magazine, January 2008)
[2] WIRELESS Transmission Of Electric Power by Syed Khadeerullah (Electrical India magazine, January 2008) Magazine of "Electrical India 2010"
[3] IEEE Smart Grid Series of Standards IEEE 2030 (Interoperability) and IEEE 1547 (Interconnection) Status Preprint Thomas Basso and Richard DeBlasio Presented at Grid-Interop 2011 Phoenix, Arizona December 5-8, 2011
[4] Smart Grid for a Sustainable Future G. M. Shafiullah*, Amanullah M. T. Oo, A. B. M. Shawkat Ali, Peter Wolfs Higher Education Division, School of Engineering and Technology, Central Queensland University, Rockhampton, Australia. Email: *g.shafiullah@cqu.edu.au, gmsbd@yahoo.com Received September 14th, 2012; revised October 14th, 2012; accepted October 21st, 2012
[5] Role of Internet of Things in the Smart Grid Technology R. Al-Ali, Raafat Aburukba Department of Computer Science and Engineering, American University of Sharjah, Sharjah, UAE Email: aali@aus.edu Received May 2015

©IJRASET: All Rights are Reserved

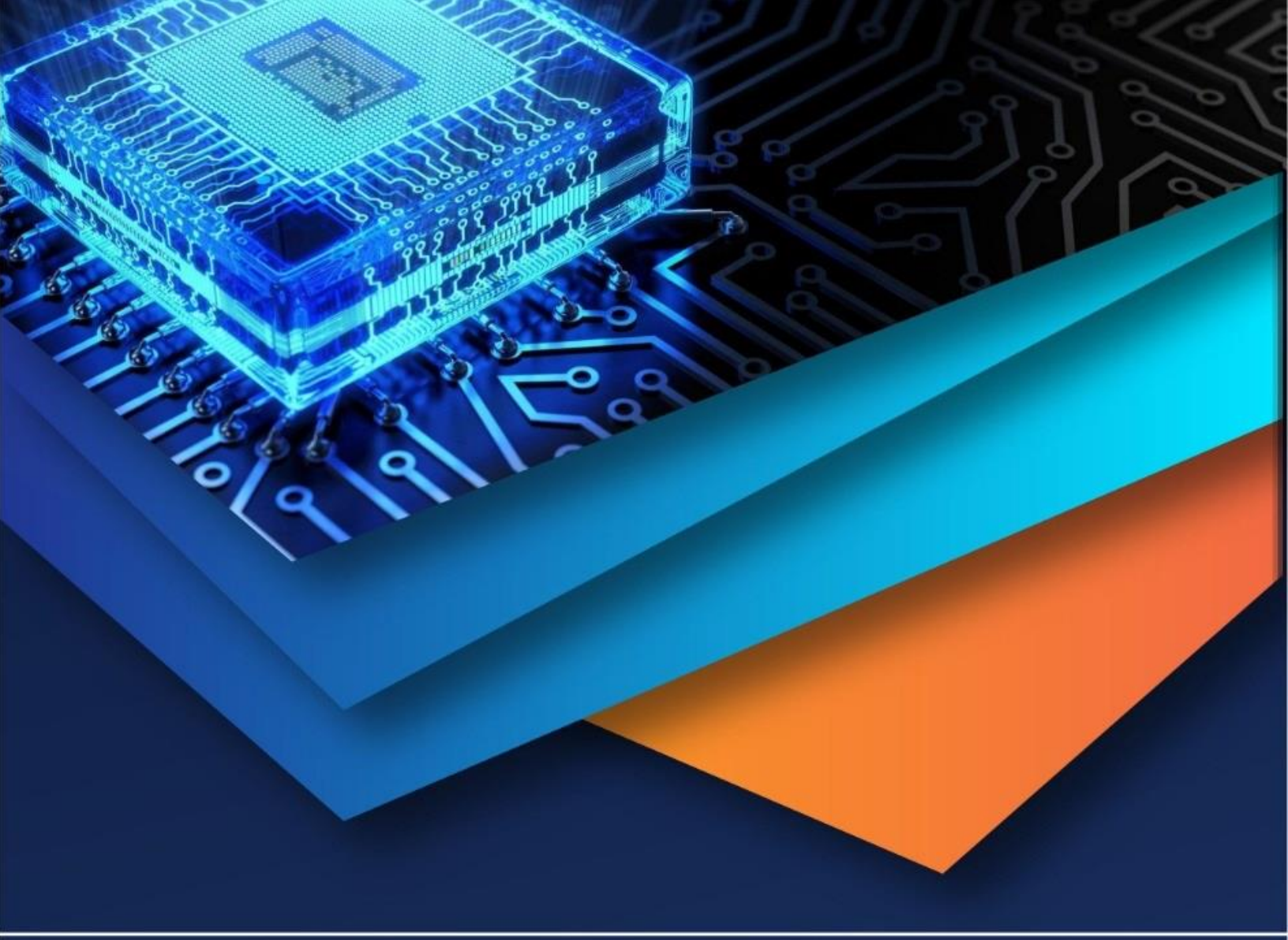

10.22214/IJRASET

45.98

IMPACT FACTOR: 7.129

IMPACT FACTOR: 7.429

INTERNATIONAL JOURNAL FOR RESEARCH

IN APPLIED SCIENCE & ENGINEERING TECHNOLOGY

Call : 08813907089 (24*7 Support on Whatsapp)