iJRASET
International Journal For Research in
Applied Science and Engineering Technology

INTERNATIONAL JOURNAL FOR RESEARCH

IN APPLIED SCIENCE & ENGINEERING TECHNOLOGY

Volume: 8 **Issue:** II **Month of publication:** February 2020

DOI: http://doi.org/10.22214/ijraset.2020.2079

www.ijraset.com

Call: 08813907089 | E-mail ID: ijraset@gmail.com

International Journal for Research in Applied Science & Engineering Technology (IJRASET)
ISSN: 2321-9653; IC Value: 45.98; SJ Impact Factor: 7.177
Volume 8 Issue II Feb 2020- Available at www.ijraset.com

Online Quality Inspection for Die Casting Products

Dr. V. G Pratheep[1], Ariya Manickam. M[2], Chinna Thambi. M[3], Sree Vathsan.Y [4]
[1]Associate Professor, Department of Mechatronics, Kongu Engineering College, Perundurai, Erode-638060
[2, 3, 4]IInd year, B.E .Mechatronics Engineering, Kongu Engineering College, Perundurai, Erode-638060

Abstract: Quality control is one of the important factor in any industries. Products with minimal errors is said to be accepted products. Nowadays quality analysis are done through manual measurements using various gauges. It is a long time process for checking all the components. In Industries, Die Casting Products are made enormous and it is difficult to measure individual components. Not all the components are measured individually. At the time of setup stage at regular interval testing process is carried out. The defective components are removed at the final stage, It is one of the major disadvantage in existing methodology. In the Proposed system inspection of products is done through image processing technique. The Camera is mounted above the conveyor, it will capture the image of the object and made compare with the true image. If there is any faulty component founded, the pneumatic cylinder gets actuated to remove the component from the conveyor. This inspection system will provide the solution for testing all components without any manmade help. There is no necessity of using various measuring gauges since with the help of pixel rate of captured image it will analyse the components. The defective components are eliminated, then and there with the help of pneumatic cylinder.

I. INTRODUCTION

In industries, quality control unit plays a vital role. In existing system man power is required for analyzing the quality of a product, by using various gauges like vernier caliper, screw gauge and dial gauge etc., It also takes time to validate each products. In mass production industries, quality may not be checked for each components whereas the quality is tested during setup stage and at regular period of intervals. There may be possibility of defects in a components The proposed setup will reduce the man power involved in identification of defective products during manufacturing. By implementing online quality checking system in an industry, quality of each and every component can be tested, increasing the productivity of component and also reduce manpower, cost benefit. It is a beneficiary to implement an online quality inspection system in punching operation using machine vision.

II. LITERATURE SURVEY

Boerner & Strecker, et al (2005)In this patent the strongly reflected metal is the one who can be described as the most difficult classifying metal in defects classification. Most metal surface defects are tiny involving obvious faulty items such as holes, stains, scratches, pilling, indentation, burrs and other ill-defined defects. These defects are small in size, refractive in light and can't be described using explicit measures, which make automatic defect detection difficult.

S. J. Swiłło, M. Perzyket al(1956) in this patent the purpose of the project is to create a computerized system for the determination of quality of aluminium castings, such that will open new scientific and research capabilities and will create opportunities for a better understanding of the phenomena accompanying the formation of surface defects in castings. This will lead to better understanding and scientific exploration of factors limiting the casting process of aluminium parts. Studies of this type will help future efforts for an early elimination of surface defects.

Yang Tao, Zhiqing Wen.et al (2003) in this patent A method and apparatus is provided which addresses the drawbacks of the prior art and which incorporates two separate imaging devices, one near-infrared and one mid-infrared imaging device which simultaneously capture images of the passing objects. The background information is removed and images of the objects remain.

III. PROBLEM DEFINITION AND SOLUTION

A. Existing System

At present, vernier gauge and screw gauge are used for measuring the dimension of the components which is shown in Figure 2.1There will be a group of people or a team is allotted for measuring those dimension in industry, their job is to analyse the component in production unit at regular period of interval. They need maintain the separate data sheets for every components and analyse manually with help of that data sheet. They should made study on the produced component and reported as either good or faulty component. The faulty component is eliminated at that stage. In most of the cases quality checking is done at the final stage.

©IJRASET: All Rights are Reserved

Figure(3.1)

1) *Drawbacks Of Existing Method:* The existing methods have the following bars on their implementation. It consume more time and man power .It also requires different physical gauges to measure different parameters. It is impossible to measure all the component in production unit through manual checking. If it not done so the quality cannot be attained .In existing system, quality of the component is analysed only at the final stage so there will be wastages in men, material and money during machining process.

B. Proposed System

The proposed project is used to check the product quality. Because, in an industry they are checking the product quality manually and due to this there was a demand in production. The units of our project are control unit and sensing unit. Sensing unit contain Logitech C310 camera which used to capture the product, when conveyor belt is running. Control unit contain MYRIO kit and actuators. The details of the manufactured product sensed by capture the product with the help of Logitech C310 camera. The camera interfaced with MYRIO kit. Logitech C310 senses the dimensions of the product while conveyor belt is running. Its quality calculated with help of comparison between true image and current image. Next important factor is scaling quality of product. It is done just compare true image to current image of the products. The time limit of our project used to measure quality of 24 products in one minute. It's sufficient for measuring large amount of product. If any product shows the defect output connected to the solenoid valve and it connected to the single actuating cylinder. The user interface technique used to protect the product. Our Literature study based upon the pressing operation, the manufactured horn housing running in conveyor belt and the image captured by the camera and the image compared with the true image by using MYRIO board it can calculate the outside diameter , inner diameter, number of holes and holes diameter A defect product's included in the trolley and the correct product go by the conveyor for pick and place arrangement and the defected piece sensed by MYRIO kit it output is interface with solenoid valve and the solenoid valve output connected to the cylinder for pushing into the trolley.

1) *Advantages*

a) No gauges required .
b) Able to analyse all component.
c) Consume less time.
d) No need to maintain data sheet .
e) High efficiency .

©IJRASET: All Rights are Reserved

C. Block Diagram Of The Model

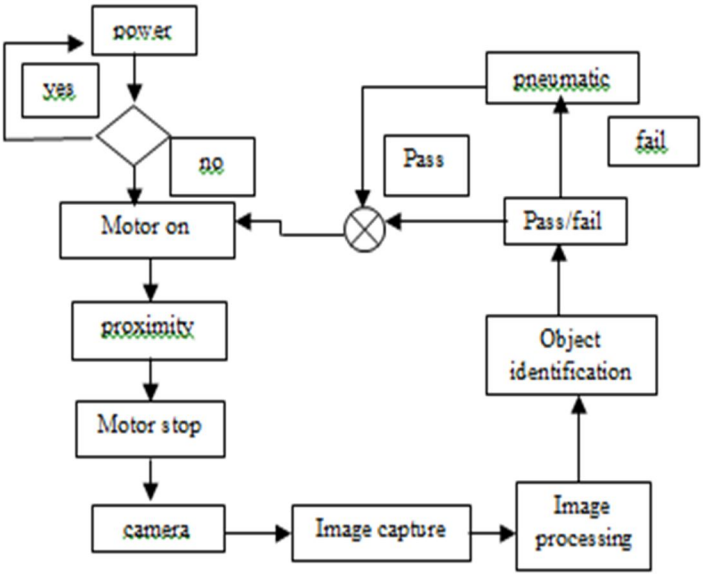

Figure(3.2)

IV. COMPONENETS AND DESCRIPTION

The components which are used in my project are mentioned and explained.

A. Camera

A camera is an optical instrument for recording or capturing images, which may be stored locally, transmitted to another location, or both. The images may be sequences of images constituting videos or movies. The camera is a remote sensing device as it senses subjects without any contact. The Camera should have HD recording. The Resolution should be at least 640*480 pixels. The Camera should have high resolution and should be inter-connectable. Hence, the Camera which is used in this project is Logitech C310 HD Camera, which has 5MP Resolution along with 1280*720 pixel capturing. They are USB connectable and hence serves the purpose.

B. Pneumatic Cylinder

Pneumatic cylinder are mechanical devices which use the power of compressed gas to produce a force in a reciprocating linear motion like hydraulic cylinders, something forces piston to move in the desired direction. The piston is a disc or cylinder and the piston rod transfers the force it develops to the object to be moved. Engineers sometimes prefer to use pneumatics because they are quieter cleaner and do not require large amount of space for fluid storage. Because the operating fluid is a gas leakage from the pneumatic cylinder will not drip out and contaminate the surroundings making pneumatics more desirable where cleanliness easier requirement. Double acting cylinder.

It use the force of air to move in both extend and retract stroke. They have two ports to allow air in one for out stroke and one for in stroke, stroke length or this design is not limited, however the piston rod is more vulnerable to buckling and bending.

C. Plumber Block

Pillow block is a pedestal used to provide support for a rotating shaft with the help of compatible bearings & various accessories. Housing material for a pillow block is typically made of cast iron or cast steel. A pillow block usually refers to housing with an included anti-friction bearing. A pillow block refers to any mounted bearing wherein the mounted shaft is in a parallel plane to the mounting surface, and perpendicular to the center line of the mounting holes, as contrasted with various types of flange blocks or flange units. A pillow block may contain a bearing with one of several types of rolling elements, including ball, cylindrical roller, spherical roller, tapered roller, or metallic or synthetic bushing. The type of rolling element defines the type of pillow block. These differ from "plumber blocks" which are bearing housings supplied without any bearings and are usually meant for higher load ratings and a separately installed bearing.

©IJRASET: All Rights are Reserved

D. Motor

A DC series motor falls under the category of self excited dc motors, and its gets its name from the fact that the field winding in this case is connected internally in series to the armature winding. Thus the field winding are exposed to the entire armature current unlike in the case of a shunt motor.

A series wound motors has linear relationship existing between the field current and the amount of torque produced. i.e. torque is directly proportional to current over the entire range of the graph. As in this case, relatively higher current flow through the heavy series field winding with thicker diameter, the electromagnetic torque produced is much higher than normal. Unlike in the case of DC shunt motor, the DC series motor has poor speed regulation i.e. the series motor is unable to maintain its speed on addition of external load to the shaft.

E. Processor & FPGA

MyRIO is a real-time embedded evaluation board made by National Instruments. It is the module process done in all , it is used to develop applications that utilize its onboard FPGA and microprocessor. It requires LabVIEW It's geared towards students and basic applications. The myRIO-1900 is a tool you can use to teach and implement multiple design concepts with one reconflurable I/O (RIO) device. Featuring I/O on both sides of the device in the form of MXP and MSP connectors, it includes 10 analog inputs, six analog outputs, 40 digital I/O lines, WiFi, LEDs, a push button, an onboard accelerometer, a Xilinx FPGA, and a dual core ARM Cortex-A9 processor. You can program the myRIO-1900 with LabVIEW or C. This WiFi-enabled version allows for fast and easy integration into remote embedded applications.

F. Relay

A relay is an electrically operated switch. Current flowing through the coil of the relay creates a magnetic field which attracts a lever and changes the switch contacts. The coil current can be on or off so relays have two switch positions and they are double throw (changeover) switches.

Relays allow one circuit to switch a second circuit which can be completely separate from the first. For example a low voltage battery circuit can use a relay to switch a 230V AC mains circuit. There is no electrical connection inside the relay between the two circuits; the link is magnetic and mechanical. One 4-point and one 1-point relays are used in this project.

G. Mild Steel Plate

Steel is an alloy of iron and other elements, primarily carbon. The density of steel varies based on the alloying constituents but usually ranges between 7,750 and 8,050 kg/m3 .. Steel is used in a variety of other construction materials, such as bolts, nails, and screws and other household products and cooking utensils. Here, the Mild Steel is used for the Base Plate which provides the strength to withhold the load of the robot. The Dimension of the Base Mild Steel Plate is 40 cm * 40cm * 4mm. The MS Plate of 2mm thickness is used to provide support to the storage tank assembly.

H. Solenoid Valve

A solenoid valve is an electromechanically operated valve. The valve is used to controlled by an electric current through a solenoid in the case of a two-port valve the flow is switched on or off; in the case of a three-port valve, the outflow is switched between the two outlet ports. Multiple solenoid valves can be placed together on a manifold. Solenoid valves are the most frequently used control elements in fluidics.

Their tasks are to shut off, release, dose, distribute or mix fluids. They are found in many application areas. Solenoids offer fast and safe switching, high reliability, long service life, good medium compatibility of the materials used, low control power and compact design.

I. Flat belt

Flat belt are used in power transmission and conveying systems. They are noted for their power transmission efficiency, cost effectiveness and ease of installation and use. Typical applications include conveyors, compressors, machine tools and other heavy industrial equipment. When comparing flat belt drives to V-belt drives, there are advantages to using flat belts. The small bending cross-section of the belt causes little bending loss.

This fact, coupled with even running and the absence of pulley wedge effects, leads ti higher flat belt efficiency. The flat belt is used in conveyor construction .

©IJRASET: All Rights are Reserved

J. Bearings

A bearing is a machine element that constrains relative motion and reduces friction between moving parts to only the desired motion. The design of the bearing may, for example provide for free linear movement of the moving part or for free rotation around a fixed axis; or, it may prevent a motion by controlling the vectors of normal forces that bear on the moving parts. Many bearings also facilitate the desired motion as much as possible, such as by minimizing friction.

V. FEASIBILITY STUDY

A. Economical Feasibility

The proposed project is economically feasible and portable. The cost is given as follows,

S.No	List of Components	Quantity	Cost
1.	Camera	1	2,200
2.	Pneumatic Cylinder	1	850
3.	Plumber Block	1	650
4.	Motor	4	1,200
5.	Processor & FPGA	1	4,700
6.	Relay (1 point)	1	120
7.	Relay (4 point)	1	450
8.	Mild Steel Plate (40cm*40cm*2mm)	1	340
9.	Mild Steel Plate (40cm*40cm*4mm)	1	650
10.	Solenoid Valve	1	600
11.	Conveyor Belt	1	1840
12.	Bearing	4	850
13.	Single core wire	1	450
Total cost			14,900

Figure (4.1)

B. Operational Feasibility

The Mechanical setup is designed and modeled using Creo Parametric and the conveyor is analyzed in the ANSYS 18.1. The shaft is tested of its load bearing capacity. The construction of the Mechanical setup is an iterative process and the design calculations are performed accurately. The electrical setup of the project is simple and based on the Ladder Logic Diagram. The Program was done using the software LabVIEW 2015 provided along with the Vision and Motion add-on module. The dual□ core ARM Cortex-A9 processor is used for handling the input and output connections. The relay is used to trigger the solenoid and hence the quality inspection system is operationally feasible.

C. Technical Feasibility

Mechanical Setup

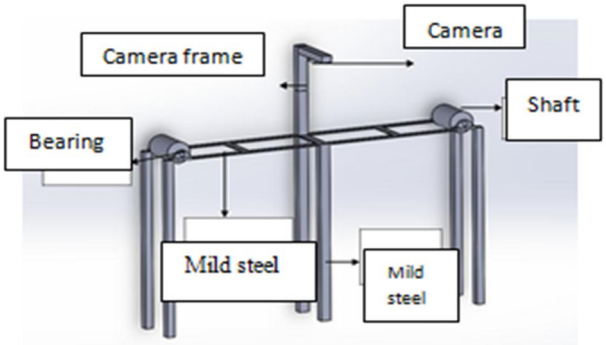

Figure(4.2)

©IJRASET: All Rights are Reserved

The Mechanical setup is designed as per the calculated dimensions. The Side frame and the side stand is made of Mild Steel while the side plates are also made up of mild steel provided support by the Mild Steel. The motor is connected to the shaft by using sprocket and chain drive. The shaft is supported at two ends by using plumber blocks. Another shaft is located at a distance of 2500mm from the driven shaft which is used to mount the conveyor set up. The motors are clamped to the Base plate using the screws. Two L bends are placed in alternate positions of main frame which is connected by means of base plate. The Logitech C310 camera is placed at the top of the base plate to capture the image.

D. Electrical Setup

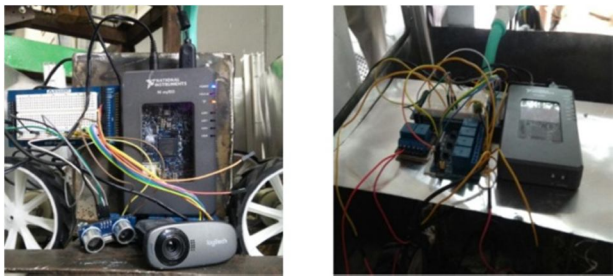

Figure(4.3)

The Electrical setup consists of Processor, Relays (4 - point and 1 – point), Camera, pneumatic cylinder, proximity sensor and solenoid valve.The relays are used to provide supply to the solenoid valve and motor respectively. The Motor as well as the proximity sensor operates at 12 V DC. The Battery is installed along with the machine as the Power Supply Unit. Thus, the camera is connected to my-Rio 1900 and signal from it is used to control the motion of the conveyor and solenoid valve actuation. To detect the motion of the horn housing, proximity sensor is used. The rejected piece are removed by the pneumatic actuator. Thus, the machine is technically feasible in terms of mechanical and electrical setup. The machine works autonomously on successful and correct algorithm of the program.

VI. WORKING

The 12v DC power supply is used to operate dc series motor wich is used for conveyor belt .It runs continuously until the proximity sensor senses the component in the conveyor. On the other hand the details components sensed by Logitech c310 camera captures the image of the objects in the conveyor .After capturing the image of the object it sent sends the information to control unit. Control unit contain MYRIO kit and actuators. The camera interfaced with MYRIO kit. Logitech C310 senses the dimensions of the product while conveyor belt is running. Its quality calculated with help of comparison between true image and current image. Next important factor is scaling quality of product. It is done just compare true image to current image of the products. The time limit of our project used to measure quality of 24 products in one minute. It’s sufficient for measuring large amount of product. The screen resolution setup diagram as shown figure(5.1)

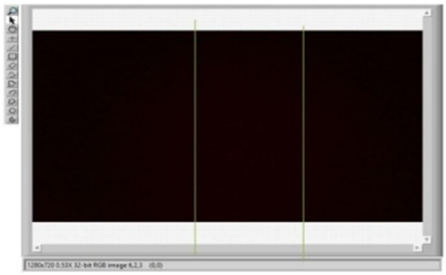

If any product shows the defect output, solenoid valve is actuated which is connected with the single actuating cylinder. The user interface technique used to protect the product. Our Literature study based upon the pressing operation, the manufactured horn housing running in conveyor belt and the image captured by the camera and the image compared with the true image by using MYRIO board it can calculate the outside diameter , inner diameter, number of holes and holes diameter A defect product's included in the trolley and the correct product go by the conveyor for pick and place arrangement and the defected piece sensed by MYRIO kit it output is interface with solenoid valve and the solenoid valve output connected to the cylinder for pushing into the trolley. The component display automatic and the captured image resolution setup and the photographic view of the project

©IJRASET: All Rights are Reserved

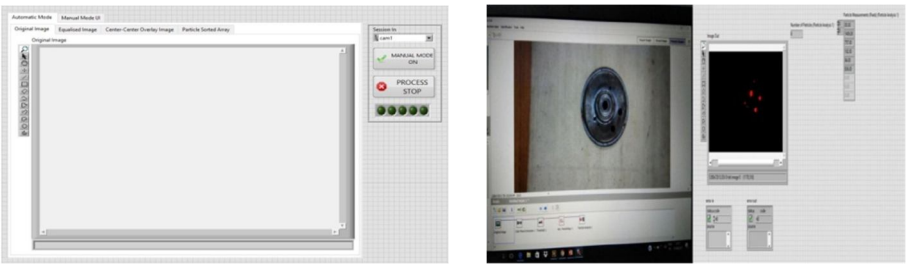

Figure(5.2)

VII. CONCLUSION

In mass production industries, quality may not be checked for each components whereas the quality is tested during setup stage and at regular period of intervals. There may be possibility of defects in component .The proposed setup will reduce the man power involved in identification of defective products during manufacturing. By implementing online quality checking system in an industry, quality of each and every component can be tested, increasing the productivity of component and also reduce manpower, cost benefit. It is a beneficiary to implement an online quality inspection system in punching operation using machine vision.

VIII. FUTURE SCOPE

Since our project calculate hole diameter, inner diameter and outer diameter of the horn housing we cannot able to predict the depth of the horn housing using this machine vision i.e., only 2-Dimensional image of the component is captured and analysed for the study but in future it has the possibility of capturing image in 3-dimensional manner with may further reduce the man power and gauges usage.

REFERENCES

[1] Beyerer, Jurgen; Puente Leon, Fernando &Frese, Christian (2016). Machine Vision – Automated Visual Inspection: Theory, Practise and Applications. Berlin: Springer. Vol 2, pp-4710-4713
[2] Bhat,Pravin Gradientshop (2010) “A gradient-domain optimization framework for image and video filtering”
[3] Boerner&Strecker,(2005) **“**defects classification” China Patent 6087207
[4] Cognex (2016). “Introduction to Machine Vision”(PDF). Assembly Magazine.
[5] Gonzalez,Rafael(2008).’Digital Image Processing,3rd’.Pearson Hall.
[6] Mark Cognex (2016). “Introduction to Machine Vision”. Assembly Magazine.Retrieved on 9 February 2017
[7] Puente Leon: Beyerer, Jurgen, Fernando & Frese, Christian (2016). Machine
[8] Vision Automated Visual Inspection: Theory, Practise and Applications.
[9] Berlin: Springer. ISBN 978-3-662-47793-9. doi : 10.1007/978-3-662-47794-6. Retrieved on 11 October 2016
[10] Richardson and Ronny (2003). “Digital Imaging: The wave of the future”. TheJournal. 31(30). Retrieved on 28 June 2012
[11] Swiłło S.J, Perzyk.M(1956)“archives of foundary engineering volume 11” , special issue 2011
[12] Yang Tao, Zhiqing Wen(2003)“Capturing modes of an object” The United States Patent Number is US6610953

©IJRASET: All Rights are Reserved

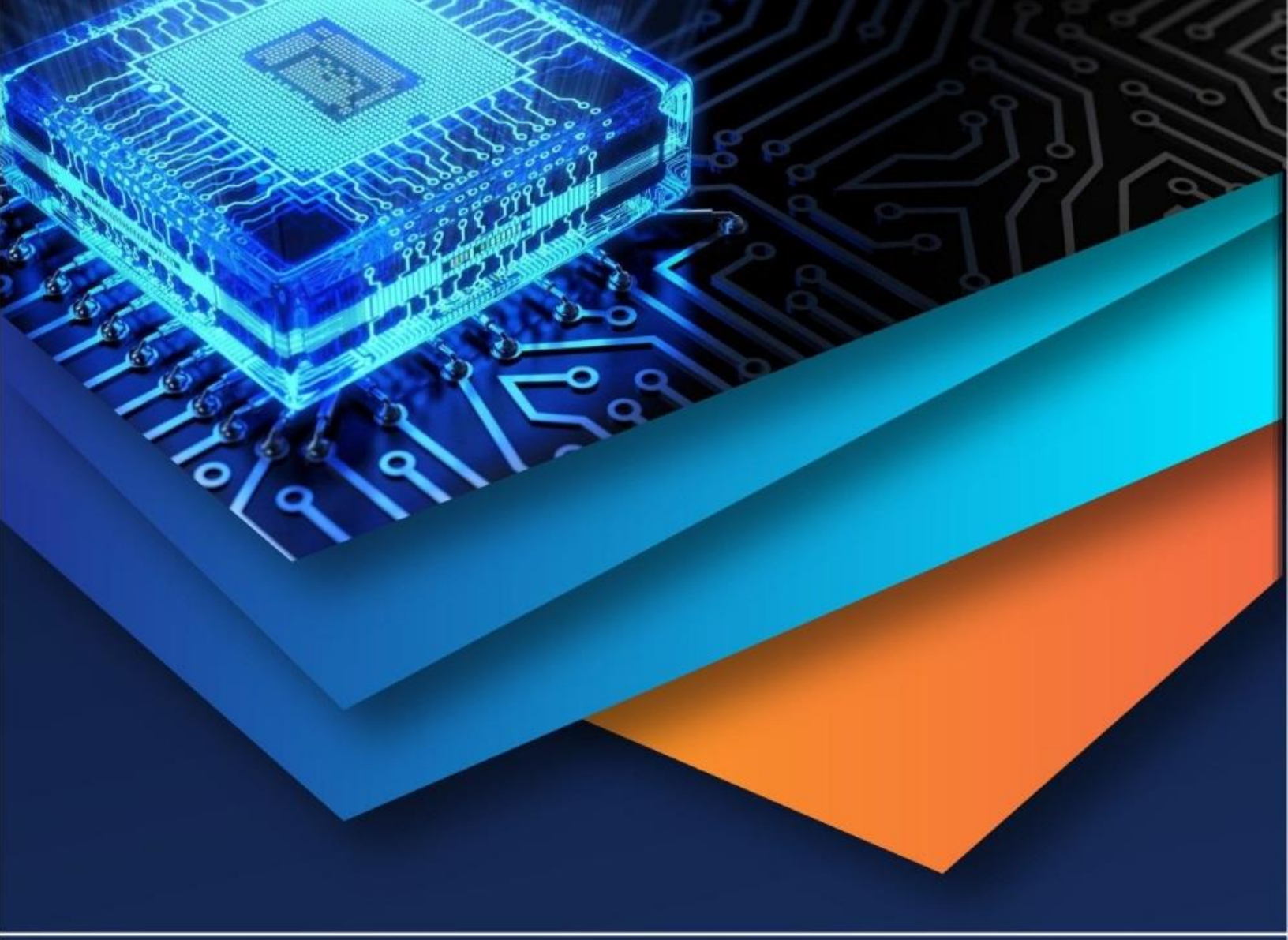

10.22214/IJRASET

45.98

IMPACT FACTOR: 7.129

IMPACT FACTOR: 7.429

INTERNATIONAL JOURNAL FOR RESEARCH

IN APPLIED SCIENCE & ENGINEERING TECHNOLOGY

Call : 08813907089 (24*7 Support on Whatsapp)