iJRASET
International Journal For Research in
Applied Science and Engineering Technology

INTERNATIONAL JOURNAL FOR RESEARCH

IN APPLIED SCIENCE & ENGINEERING TECHNOLOGY

Volume: 8 **Issue:** III **Month of publication:** March 2020

DOI:

www.ijraset.com

Call: 08813907089 | E-mail ID: ijraset@gmail.com

International Journal for Research in Applied Science & Engineering Technology (IJRASET)
ISSN: 2321-9653; IC Value: 45.98; SJ Impact Factor: 7.429
Volume 8 Issue III Mar 2020- Available at www.ijraset.com

Automation and Surveillance of Green House

Vinayak S. Janwe[1], Kartik M. Rasekar[2], Aditya S.Takarkhede[3], Shwetam S. Borikar[4], Dr. S. G. Akojwar[5]
[1, 2, 3, 4] *Student, Instrumentation Engg. Dept., Final Year, GCOEC*
[5]*Head, Instrumentation Engg. Dept., GCOEC*

Abstract: Piling demands due to aggressive escalation in population figures it projects a mass challenge to meet. Similar probes can be localised in field of Power sector, Service providers and Agriculture sector too. This paper is related to agricultural aspect and keeping the artificial approach to locus greenhouse emergence. The epicentre is to increase yield within same workspace with state of art technologies embedded controllers while constraining basic parameters such as humidity, temperature, moisture and water discharge to meet. An approach is also made to allow mixed crop regulation within same territory so that a multi-dimensional system can be channelled simultaneously. This is invariably achieved by Arduino-Uno in association with a network of relays and sensors to monitor the same and can be strategized control by GSM module.
Keywords: Automation, smart green house, artificial intelligence, controller, GSM

I. INTRODUCTION

Agriculture, a prime profession in India with a distinctive handout of about 18-19% in GDP, faces a giant problem statement to feed the exponential pressure due to population, environmental effects, water scarcity, etc. So, to enhance the yield besides pesticide and harmful chemicals to achieve a minimalistic ultimatum state of the art technologies can be put up so that suburbs can also contribute. Green house in focus can be structured as a plant in control engineering layout and with help of some extensive hardware involving sensors and controllers the parameters can be monitored.

A system that cynosure the optimisation of environmental conditions to emphasize plant maturation concomitantly within short time span, which is prime and unbiased directive of present day agriculture [1].These are customarily furnished with plastic wall or glass in order to allow heat energy sealing as well as providing a transpicuous nature to assembly.

With broad array of differences in external or conventional agriculture, houses work at microscopic levels of parametric controls, such as directly sunlight feeding is replaced by trapped heat, climate is some extent can be made isolated as to provide the control for directed plant [2].

Integration of AI and conventional agriculture dispense vast control and monitoring facilities such as data acquisition, monitoring, surveillance and significant reduction in labour costs. The paper capitalised the hardware assembly with actuators, valves, relays, sensors and human machine interface can be made by GSM module and Arduino. The controller uniformly surveils computed parameters of sensors and corroborate them with pre-set compiled values and scrutinize to advocate a suitable action to be taken at instant, thereby triggering actuator.

Many research articles shown the use of other networking devices such as ESP8266-ESP-12E Wi-Fi module [4]with enabling the use of simple M2M [5] communication protocols, fuzzy logic controller can also be employed to share the purpose, the core of control strategy remains same as the values of considered parameters must remain in the tolerance band.

II. LITERATURE AND THEORY

While being one of the centralised topic in the bio-technical field it has invited many lateral engineering schematics to aid the achievement of prerequisite priorities. There are several innovation that took place in this domain with extensive heterogeneity in operational theme.

Firstly mechanical control were employed to ensure the seepage regulations, later this was triangulated to electromechanical devices which included relays, valves etc. Now with the work progressing to the minimalistic levels perse microscopic levels, the optimisation techniques are now endured in part by part so that an overall clutch can be improved and hence improving the yield.

This is achieved by modern day semiconductor technology and artificial intelligence blooming invites major role in control plan of action. The presented prototype embedded Arduino-UNO, driver IC, SIM800L module and relays administering various equipment's.

The perception of erecting this module is to inspect and reliability of system till what extent the parameters such as water levels, temperature can be maintained within marginal frame. Further it can be seen that two separate work space or work station are being held so that a multi-dimensional approach can also be enquired.

©IJRASET: All Rights are Reserved

This paradigm constitutes of various sensors viz., capacitive soil moisture sensor and temperature sensor DHT11. The directed sensors variably administer several other operation like exhaust fan, pump, valve, lamp etc. The exhaust fan is assembled to regulate the humidity and solenoid valves are attached to work with pumps to serve moisturising whenever required simultaneously in order to facilitate photo response a magenta lamp is placed to enhance growth in plants. The block diagram is discussed in detail as under;

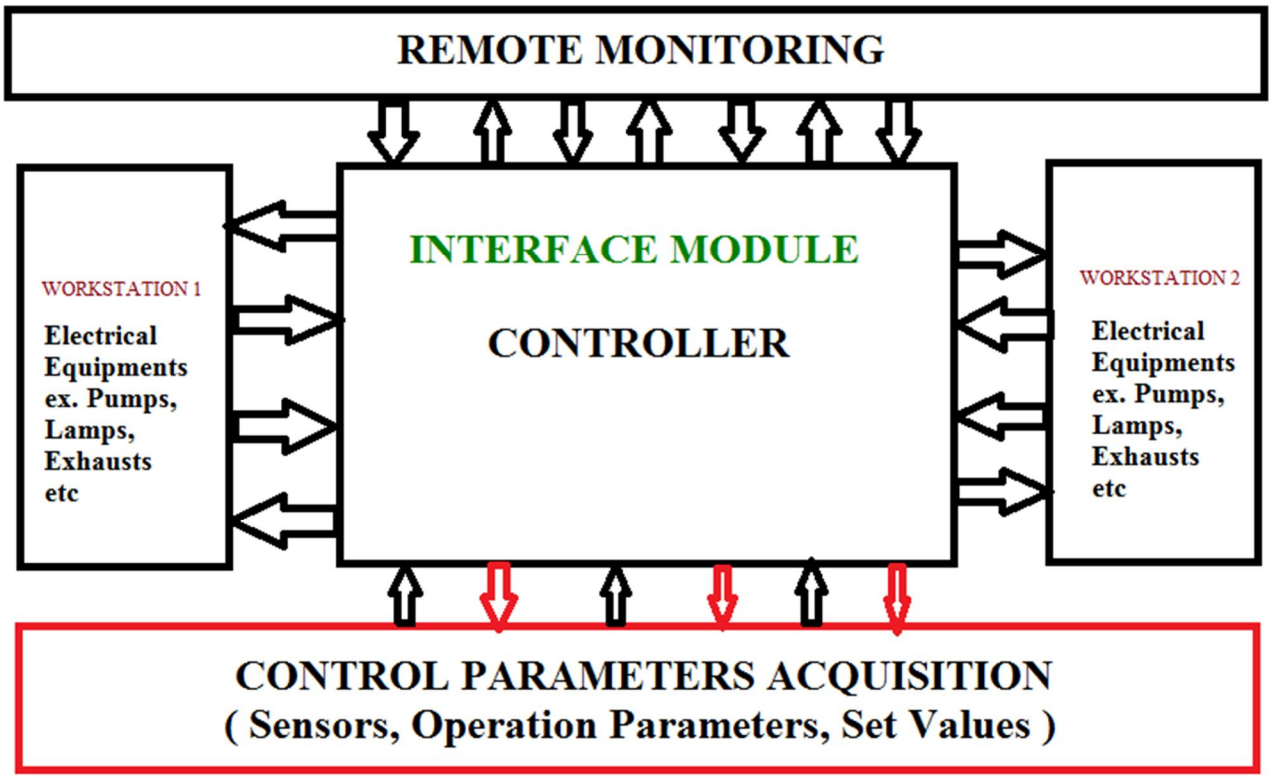

1) *Workstation 1 and Workstation 2:* These are the plantation types present in the same dome in different files consisting of several electrical loads such as pumps, sprinklers, solenoid valves, lamps etc., to keep the nature discrete the crops sown here are of different types mainly depending upon the extent of work profile, to check the multidimensional operation of the control polarisation employed in the subject.
2) *Control Parameter Acquisition:* Parameters are eccentric core of control action, the specification instruction set to obtain the values necessary to achieve requisite results. So various sensors such as capacitive soil moisture sensors, temperature sensors like DHT11 are embedded to gain real time functioning values. The processing and control circuitry involved salvage the acquired data and use them in operation.
3) *Controller*: Arduino UNO board is used to configure the control circuitry, which is core part in the operational dynamics the set values are prefaced in the systems with a specified instruction set to toggle the situation. If for example, a parameter under examination exceeds the set values then a control signal LOW is activated and the device operating under the output pin turns from ON state to OFF state, conversely, when the parameter is low than that of set value a HIGH control signal is generated and the device state changes from OFF state to ON state. This processing stage is very crucial for the regulation of conditions prevailing inside the work stations.
4) *Monitoring and Interface*: Most important of all the operations going in absence of an operator or the owner at the very site, the interface has to made in remote areas so a GSM module is also capitulated to ensure such. If any changes or operations take place the individual will be notified by a text so that the interface can be maintained bidirectional way.
5) *Relay Unit*: A series of DPDT relays are employed to ensure the control signal being followed. They are used for timely energising the utility equipment's wherever and whenever required. The relay will be energised accordingly to the error signal spotted by the comparator operation of the controller with distinctive parametric values from the real time acquired system with the pre-allocated values in the system.
6) *Display Unit*: A WH1202A 1282 display is used to get the out coming states that will be readable to the user.

©IJRASET: All Rights are Reserved

III.SYSTEM MODELLING AND OPERATION

A. *System Setup*

Figure 2: Prototype Model Greenhouse dome (Left), Control Board (Right)

The modelling assembly of the prototype can be partitioned into two main branches viz., a green house dome and the controller board. The involved casing are detailed as;

1) Green House Dome: It is core workspace which for demonstration is made of acrylic sheet that serves two purposes mainly

a) A transparent medium to pass the incident sunlight or light energy through it

b) It also helps in heat trapping to avoid bounce back

This dome shaped assembly also provide housing to many electrical appliances such as exhaust fan, lamp, pumps etc., which will operate on the commands and computing administered by the control board. The sensors are also dumped on the base grounds for the acquisition of real time data necessary for the coordinated and planned operation.

2) Control Board

The control board houses many devices such as

a) ARDUINO UNO

b) RELAYS

c) DRIVER IC

d) REGULATING IC

e) CONNECTORS

f) GSM MODULE

These devices on synchronisation work together to actuate the working of smart green house plant.

B. *Working Algorithms*

The workstation has an ARDUINO UNO commanding all the peripheral devices like sensors, relays etc.. The sensors employed in the process are Capacitive Soil Moisture Sensor V2.0 for determining the moisture level in the soil files and the DHT11 for acquiring the current temperature existing in real time. The actuators are then triggered by the programmed ports of Arduino that energised them provided with preset values entered by user.

The operational algotithm with temperature as a variable is described below in fig.3, with two conversive actions taking place simulataneously. For example the set temperature is taken as 35℃ , so when the temperature falls below such readeing the acquired data discretely demands a rise in temperature thereby turning a lamp on that will act as an external heater as shown in fig.3(b) to facilatate the growth of the plant and adjointly turning off the fan as in case of fig. 3(a). Conversely the system conditions can also be interchanged as when the temperature rises above the set value a call for lowering the present heating condition thereby summoning a fan to turn ON hence cirulating a cooling effect alongwith the turning OFF the lamps. This control strategy is desirable to maintain an adequate amount of heat energy in the house atmosphere so the plants don't get any excess or become "overloaded". Besides the above command running the next variable moisture also plays a vital role in the stigma of development in plants growth, the sensor acquiring data are buried in the soil for continuous relaying the data to the processor unit. The moisture range for different workstation will be kept discrete as variation in crop yields. The band is thereby assumed from the range 75-350 grams of water per cubic meter of air, so that the soil must remain moisten to enable the circulation in stem. The sampled mean value can help to determine whether to pump the water in the soil, as shown in fig.4.

©IJRASET: All Rights are Reserved

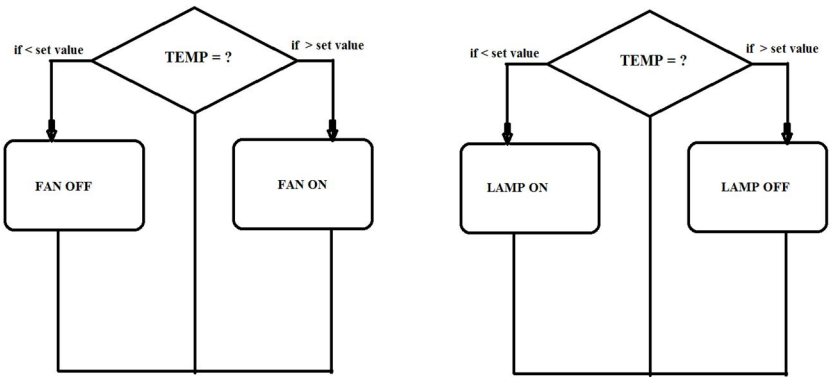

(a) (b)

Figure 3: Temperature Control Algorithm

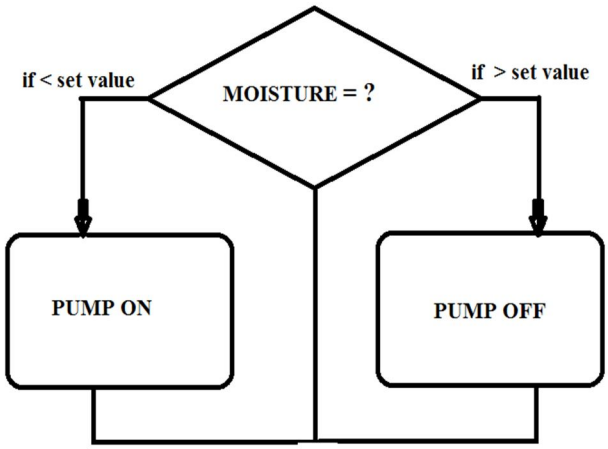

Figure 4: Moisture Control Algorithm

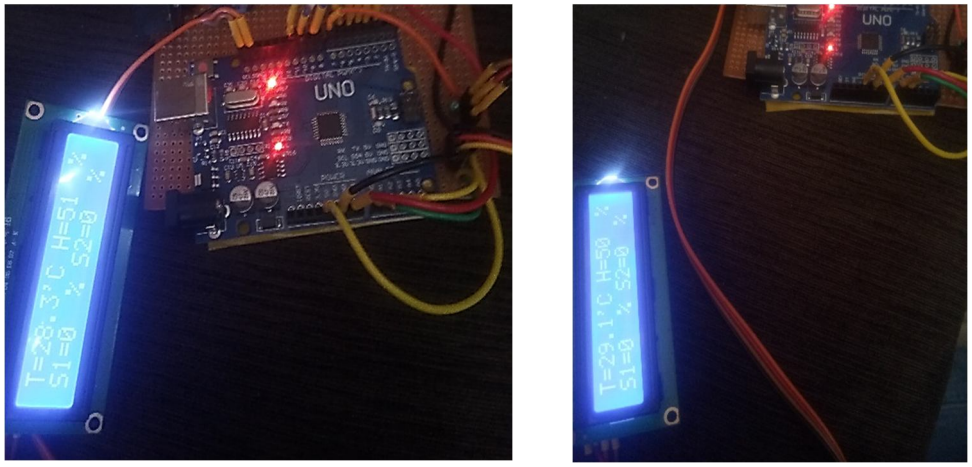

Figure 5: Results

This integrated grid of operation can be readily availed for the end user if not at the work site by an embedded GSM module that can provide a text alert on the operation taking place. The communication feature helps user to exercise a direct feed monitoring of the actions taking place. The prototype designed for the purpose provided the following reading

©IJRASET: All Rights are Reserved

IV. CONCLUSIONS

As seen from the obtained results the conditions prevailing at the time can be spectated, the temperature range fluctuates between 27 – 30℃ and the humidity ranging from 49-52 so both in under so the preferred actions will be taken by controller to mitigate these conditions. Therefore by visualizing the controls strategies involved and results obtained it can be concluded that Smart Green House is opening new doors in the field on suburb agriculture arena where the monitoring and an automated control can be done within a low capital investment. This can be more improvised by soil testing equipment's, organic fertilizer can also be mixed while treating the soils, an IoT channeling can also be done along with emerging technologies adding to its future scope. But here the use of integrated Arduino and GSM module with a driver circuit provide a cost effective solution with help of DPDT relays and readily available sensors.

V. ACKNOWLEDGMENT

This research was supported by Government college of Engineering Chandrapur (M.S). Sincere gratitude to the head of department of Instrumentation Engg., Dr. S.G. Akojwar for his expertise and pearl insights that significantly influenced this project work.

REFERENCES

[1] LI Xiaofen, QIN Linlin, LU Linjian,WU Gang, Design and Implementation of Modern Greenhouse Remote Monitoring System Based on the Android System, Proceedings of the 34th Chinese Control Conference July 28-30, 2015, Hangzhou, China.
[2] Ji-hong Zhou, Y. Zuo, Ed., Application of Computer Control System in the Greenhouse Environmental Management, 2009 International Conference on Future BioMedical Information Engineering.
[3] T. Bhuvaneswari, J. T. H. Yao, "Automated Greenhouse," IEEE International Symposium on Robotics and Manufacturing Automation 2014.
[4] Changchun Bao, Chunbao Shen, Shengming Dang and Haitao Liu, "Design of Automatic Measuring and Controlling Device for the Vegetable Greenhouse," IEEE International Conference on Control and Automation 2007.
[5] S.H. Sadati , AM.Sahari, "Design and Simulation of an automated system for greenhouse using Lab VIEW ". American-Eurasian J.Agric and Environ Sci, 3(2):279-284,2008 ISSN 1818-6769.
[6] Liu, K , "Energy Efficiency and Environmental benefits of rooftop gardens" Construction Canada, v. 44 ,no. 2, p. 17, 20-23, March
[7] M. Taki, Y. Ajabshirchi, S. Faramarz Ranjbar, A. Rohani, and M.Matloobi, "Heat transfer and MLP neural network models to predict inside environment variables and energy lost in a semi-solar greenhouse" Energy and Buildings 110, pp. 314–329, 2016.
[8] F. Lafont, and J.-F.Balmat, "Optimized fuzzy control of a greenhouse", Fuzzy Sets and Systems 128, pp. 47–59, 2002..

©IJRASET: All Rights are Reserved

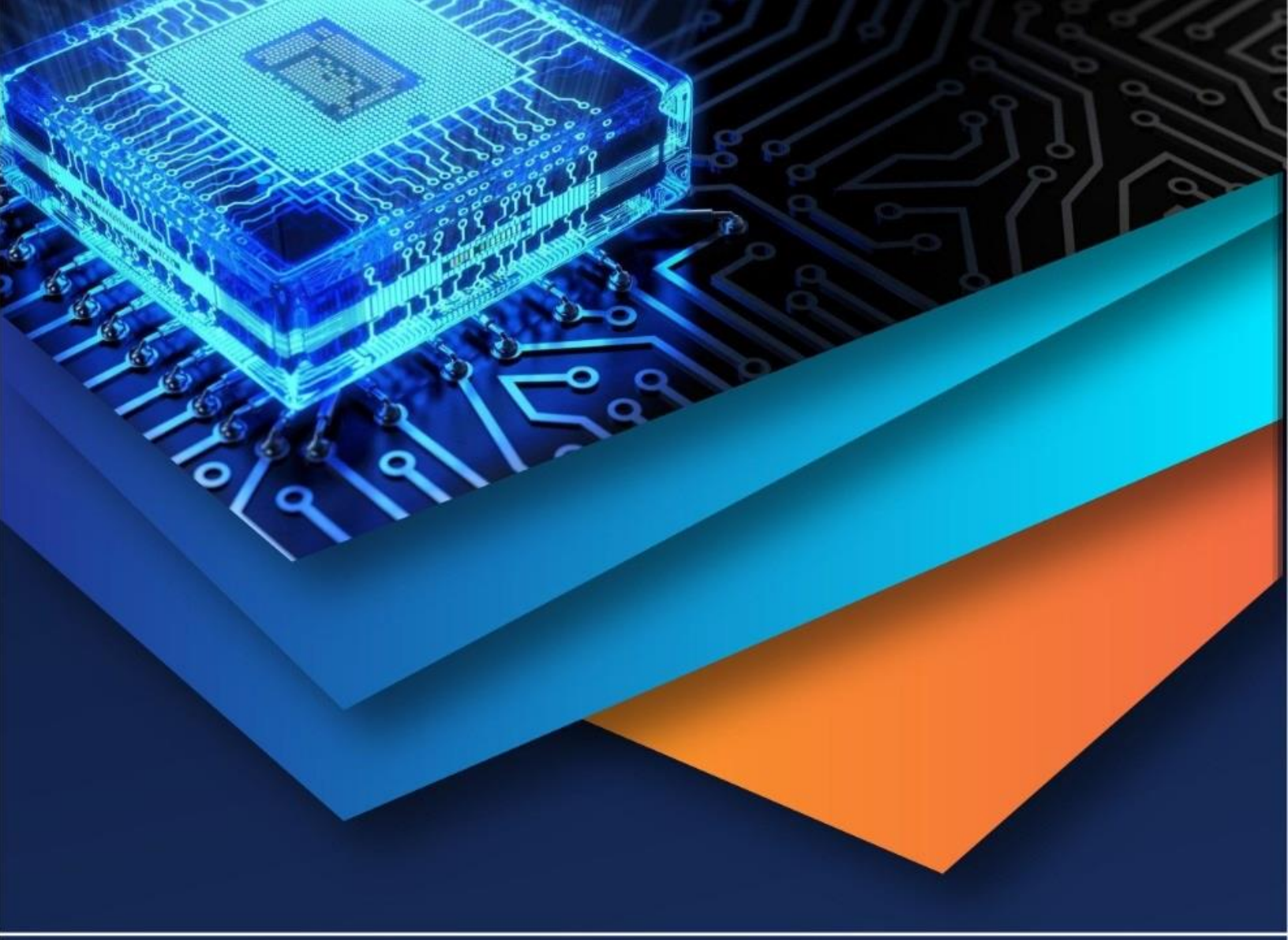

10.22214/IJRASET

45.98

IMPACT FACTOR: 7.129

IMPACT FACTOR: 7.429

INTERNATIONAL JOURNAL FOR RESEARCH

IN APPLIED SCIENCE & ENGINEERING TECHNOLOGY

Call : 08813907089 (24*7 Support on Whatsapp)