iJRASET
International Journal For Research in
Applied Science and Engineering Technology

INTERNATIONAL JOURNAL FOR RESEARCH

IN APPLIED SCIENCE & ENGINEERING TECHNOLOGY

Volume: 8 **Issue:** IV **Month of publication:** April 2020

DOI:

www.ijraset.com

Call: 08813907089 | E-mail ID: ijraset@gmail.com

International Journal for Research in Applied Science & Engineering Technology (IJRASET)
ISSN: 2321-9653; IC Value: 45.98; SJ Impact Factor: 7.429
Volume 8 Issue IV Apr 2020- Available at www.ijraset.com

Solar Mechanical Tracking using Dual Axis Control Mechanism

K. Srinivasa Rao[1], K. Chandra Nandan[2], B. Bibhuthi Prasad[3], D. Rajasekhar[4], G. S. Sashank[5]
[1]*Assistant Professor, Dept of EEE, Lendi Institute of Engineering and Technology, Vizianagaram, AP, India.*
[2, 3, 4, 5]*Electrical Electronics And Engineering, Lendi Institute of Engineering and Technology, Vizianagaram, AP, India.*

Abstract: In this project the main theme is to demonstrate a simple autonomous solar tracking system that can be used with solar panels to improve system performance in producing renewable energy. Generally in a normal Solar Tracking System we use electronic devices such as Arduino, Microprocessors, Microcontrollers, IC's, Light sensors and much more which work basically on the computing functionality. So these all may increase the cost and complexity of the system. By developing the Solar Tracking System Using Auxiliary Solar Panels the "Computing techniques are eliminated". The system is operated by using Geared Motors and Auxiliary Solar Panels. Here the internal mechanism of the Geared Motors are controlled by using the Auxiliary Solar Panels which are connects in a configuration that allows the motors to constantly move the panels into the shade. And the main solar panel tracks the solar energy. Finally this system reduces the operational cost and also efficient in operation.

Keywords: Solar Panels, Gear Motors, Bearings, Dual Axis Solar Tracking Mechanism.

I. INTRODUCTION

Solar tracking is the method of power generation from the light intensity of the sun. This is a simple method of generation of power, because sun is one of the natural resources and also a renewable energy source. The solar tracking system incorporates a solar panel which collects the solar energy from the sun. The solar tracking system generates maximum amount of power when there is high intensity of sunlight.

There are two basic classifications of solar tracking systems where one of them is the stationary solar tracking system and other one is the flexible solar tracking system.

In stationary solar tracking system, the solar panel is kept stationary at some angle of incidence based on the light intensity of the sun. And in the flexible solar tracking system system, the solar panel continuously move in the path of maximum solar light intensity. The flexible solar tracking system again classified into two types and they are the Single Axis Solar Tracking system and the Dual Axis Solar Tracking system. In single axis solar tracking system, the solar panel moves in only one axis but in the dual axis solar tracking system, the solar panel moves in two axis i.e., horizontal as well as vertical.

II. PROPOSED CONCEPT

A solar mechanical tracker is one of the solar tracking devices which intends to move the solar panel in such a way that it continuously faces towards the maximum intensity of sunlight.

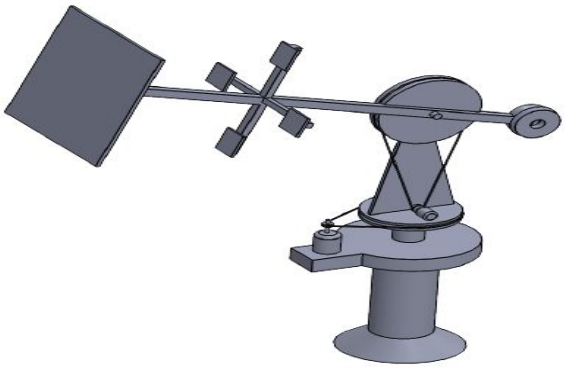

Figure 1. Proposed Diagram

©IJRASET: All Rights are Reserved

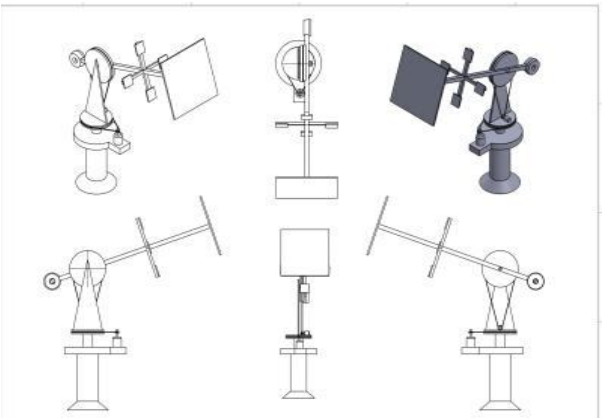

Figure 2. Different Views

Here in this tracking system the gear motors drives the main panel by taking the supply from the small solar panels.

We know that the sun moves from east to west, so that the light intensity from the sun falls on the surface of the earth and the maximum intensity of the sunlight is mostly seen on the midist part of the day and maximum amount of power can be collected that time.

When coming to the operation of the tracking system, when ever the solar intensity of light falls on one of the small solar panels or the auxiliary solar panels the auxiliary solar panel generates some voltage as per the panel rating and also based on the amount of light intensity projected on it.

Now this generated voltage is given to the dc gear motor so that the motor starts rotating in any one of the direction i.e., clockwise direction or anti-clockwise direction based on the placement of the dc gear motor on the prototype mechanism, so that the motor rotates the main solar panel on to the point of the maximum intensity of sun light.

Here the two small solar panels or auxiliary solar panels are connected to the single dc gear motor in anti polarity connection i.e., one solar panel is connected to the motor in forward or direct connection and other is connected in reverse, so that the motor can rotate in both the direction based on which auxiliary solar panel the solar light is being projected. Now the motor starts working by taking the supply from the small solar panel and rotates the main panel towards the maximum intensity of the sun light.

When ever the main solar panel is titled on the maximum intensity point of the sunlight the auxiliary solar panel comes into the shade of the main solar panel and the tracker gets stopped and then the main solar panel tracks the maximum amount of power output. After the next instant of time the sun moves in other direction and then the other small panel gets projected and now the respected motor connected to that panel starts rotating in either of the direction and tilts the main panel on to the point of maximum intensity of sunlight and so on the process repeats.

Figure 3. Prototype Model

©IJRASET: All Rights are Reserved

III. SPECIFICATIONS

S.NO	COMPONENTS	RANGE	QUANTITY
1	Main Solar Panel	6v, 1w	1
2	Auxiliary Solar Panels	6v, 150ma	4
3	Gear Motors	3.7v-6v, 100ma	2
4	BEARINGS	----	2
5	Ply sticks	----	REQUIRED
6	Wooden pieces	----	REQUIRED
7	Bands	----	2

IV. RESULT

In this Solar Tracking Mechanism using Auxiliary Solar Panels the output graph is drawn between the Power in watts and Time in hours. As from the observation the output power increases time to time until afternoon where the solar intensity of the sun is high and then gradually decreases. And the power which is collected by the main solar panel is given to the storage battery.

Initially in this solar power tracker the characteristic performance curves are drawn in the graph during a clear day and as well as in a cloudy day and readings are noted.

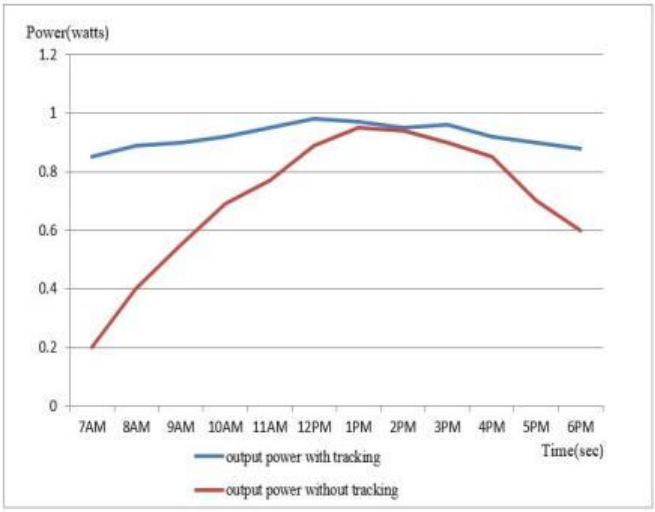

Fig. 1. Solar power output during clear day

©IJRASET: All Rights are Reserved

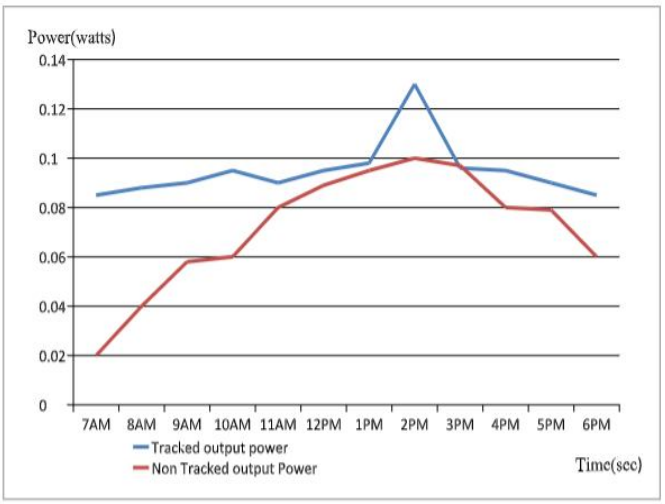

Fig. 2. Solar power output during cloudy day

The time to time noted readings which are plotted on the graphs of solar tracked power on clear and on cloudy days are shown in a tabular form below

Time	Clear day		Cloudy day	
	Tracked output power(W)	Non tracked output power (W)	Tracked output power(W)	Non tracked output power(W)
7AM	0.85	0.2	0.084	0.02
8AM	0.89	0.4	0.089	0.04
9AM	0.9	0.55	0.09	0.58
10AM	0.92	0.69	0.092	0.06
11AM	0.95	0.77	0.09	0.07
12PM	0.98	0.89	0.096	0.085
1PM	0.97	0.95	0.098	0.095
2PM	0.95	0.94	0.14	0.099
3PM	0.96	0.9	0.12	0.099
4PM	0.92	0.85	0.095	0.09
5PM	0.9	0.7	0.088	0.08
6PM	0.88	0.6	0.082	0.062

By this we can conclude that the maximum output power is collected by the solar panel when there is a high intensity of light energy which is projected on to the solar panel.

V. CONCLUSION

A lot of variety of solar tracking devices at present. These all types solar tracking devices works based on the computing functionality i.e., these all tracking devices consists of different electronic devices like microprocessors, microcontrollers, ICs and different types of sensors so these all need computer programming to operate. So these may increase the cost and complexicity of the device. By implementing the idea of solar mechanical tracking using dual axis control mechanism it reduces the complexicity in the design of tracking unit, the cost for the implementation of this model is also very cheap. The time consumption for construction of the tracking is very less. This present work is also suitable for large size of solar system and this type of tracking system is used for domestic purposes also. By this we can say that this solar tracking device can collect maximum amount of power from solar light intensity which is projected on to the solar panel.

©IJRASET: All Rights are Reserved

REFERENCES

[1] Meikap, S., Dey S. “Development of a Low-Cost Optimum Power Tracking Prototype for Solar Energy”. IEEE, 2016.

[2] Malav S., Vadhera, S.” Hardware Implementation of Solar Tracking System Using a Stepper Motor”. IEEE, 2015.

[3] Jeng-Nan Juang, R. Radharamanan, "Design of a Solar Tracking System for Renewable Energy", Proceedings of 2014 Zone 1 Conference of the American Society for Engineering Education (ASEE Zone 1)

[4] A. Masih, "Thar Coalfield: Sustainable Development and an Open Sesame to the energy security of Pakistan," IOP Conference Series: Journal of Physics, vol. 989 , no. 2018, p. 012004, 2018.

[5] A.S. Sawant, P.M. Tambavekar, P.D. Kokate, S.S. Vichare, J. Satheesh, “Design and Implementation of Solar Tracking”, International Journal of Computer Sciences and Engineering, Vol.05, Issue.01, pp.27-30, 2017.

[6] A. Sharma, V. Vaidya and K. Jamuna, “Design of automatic solar tracking controller,” 2017 IEEE International Conference on Power and Embedded Drive Control (ICPEDC), Chennai, India, pp. 505- 510, March 2017.

[7] J. G. Elerath, “Solar tracker effectiveness: it's all about availability, ”IEEE International Conference on Telecommunications Energy(INTELEC), Broadbeach, QLD, Australia, October 22-26, 2017.

[8] Lestari, Rachmana B. C. “Analisis Kinerja Energi dan Ekonomi pada Sistem Solar Tracker Sumbu Ganda Menggunakan Motor Stepper dan Sensor LDR Berbasis Arduino Uno R3”. Skripsi, Fakultas Teknik, Universitas Gadjah Mada. 2017.

[9] S. Whavale and M. Dhavalikar, “A review of Adaptive solar tracking for performance enhancement of solar power plant,” Int. Conf. on Smart City and Emerging Technology, pp. 1–8, 2018.

[10] B. Jasim and P. Taheri, “An Origami-Based Portable Solar Panel System,” IEEE 9th Annual Information Technology, Electronics and Mobile Communication Conf., pp. 199–203, 2018.

©IJRASET: All Rights are Reserved

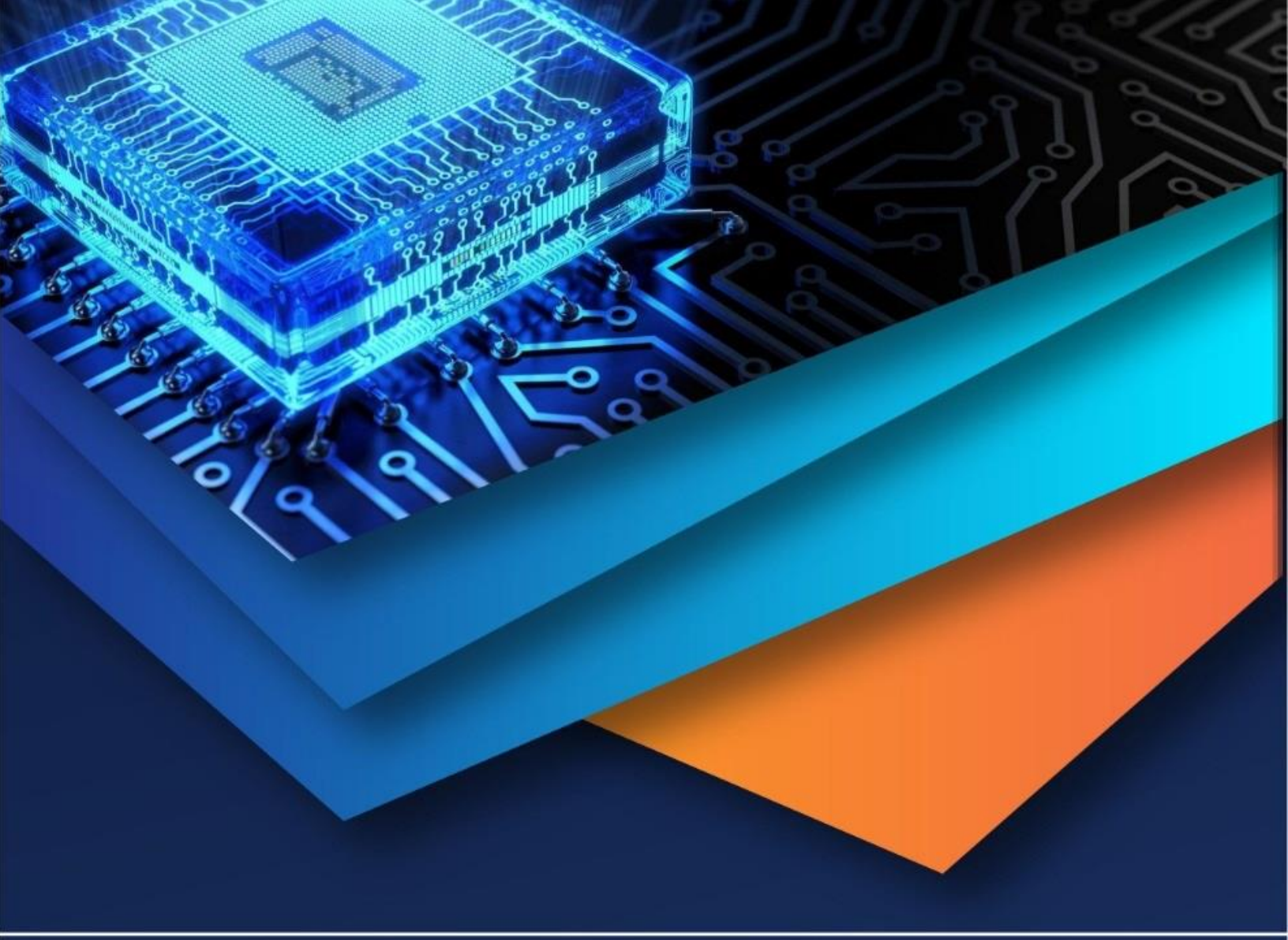

10.22214/IJRASET

45.98

IMPACT FACTOR: 7.129

IMPACT FACTOR: 7.429

INTERNATIONAL JOURNAL FOR RESEARCH

IN APPLIED SCIENCE & ENGINEERING TECHNOLOGY

Call : 08813907089 (24*7 Support on Whatsapp)