iJRASET
International Journal For Research in
Applied Science and Engineering Technology

INTERNATIONAL JOURNAL FOR RESEARCH

IN APPLIED SCIENCE & ENGINEERING TECHNOLOGY

Volume: 3 **Issue:** XII **Month of publication:** December 2015

DOI:

www.ijraset.com

Call: 08813907089 | E-mail ID: ijraset@gmail.com

Volume 3 Issue XII, December 2015
ISSN: 2321-9653
International Journal for Research in Applied Science & Engineering Technology (IJRASET)

Comparative Study and Analysis of Air Ejector Flow in Convergent and Convergent Divergent Nozzle of Aircraft

Milan Motta[1], E.Srikanth Reddy[2], V.Upender[3]
[1,2,3]*Mechanical Engineering Department, JNTU, Hyderabad*

Abstract— Ejectors are the devices which found its application commonly in aircraft system it has primary tubing ending up with a nozzle of converging or conversing diverging type which here treated as a scope for research. The current work tries to address an issue related to the effectiveness ejector which can improve the ejector efficiency and control by making an attempt to carry out a comparative study& analysis of the flow, by replacing the convergent nozzle with convergent divergent nozzle. To analyse this fluent analysis is performed & for pressure, temperature and velocity contours are made which yield the results that mass augmentation ratio is more when convergent –divergent nozzle is used in place of convergent nozzle for the taken set of dimensional data.
Keywords— Ejector, Nozzle, Mass augmentation ratio, Primary Flow, Secondary Flow

I. INTRODUCTION

A. Ejectors

Where there is a call for to drive a definite mass of fluid from one section to another in aircraft and aerospace application ejectors are extensively used. An ejector is a device in which the kinetic energy of one fluid is used to pump a second fluid. It has as an essential feature of a duct through which is a discharged a high velocity jet. The secondary fluid is drawn from a region of low pressure, mixed with the high velocity jet in the duct, and is then discharged to a region of high pressure.

Use of Ejectors or jet pumps is frequent where the local operating conditions make them more attractive than conventional rotary or reciprocating pumps. Their simplicity and absence of moving parts can mean that ejectors are ideally suited to pump moderate flows against relatively low heads under harsh conditions. They are also used as air mass augmenters. Typical applications are wind tunnels and other large ground testing facilities. When ejectors are used as jet pumps, it is required to increase the pressure level of the fluid with the quantity of flow being limited. On the other hand, where it is required to be used as an augmenter of flow, the head that results is low.

B. Ejector Construction

Three basic parts by which an ejector Gets comprised: a nozzle, a mixing chamber and a diffuser. In a typical ejector high pressure motivating fluid (Ma) enters at 1, expands through the converging-diverging nozzle to 2. The suction fluid (Mb) enters at 3, blends with the moving fluid in the mixing chamber 4. Both Ma and Mb are then re-compressed through the diffuser to 5 as shown in below figure 1. Steam-jet ejectors are typically furnished in cast iron or steel with a stainless steel nozzle. Due to the extensive range of functions for steam jet vacuum equipment, the units are frequently specified in special alloys and plastics. Here for the analysis of steam jet, carbon, stainless steel, Monel, Ni-resist, Teflon, titanium, ceramics is used as material. These designs are frequently used where a low first cost is more significant than service economy, for alternating use or for applications where water is not available

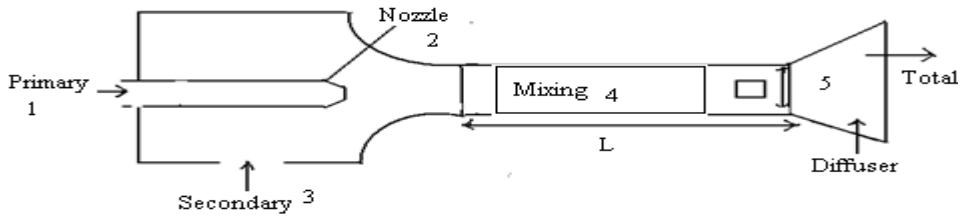

Fig. 1: Components and design of Ejector

©IJRASET 2015: All Rights are Reserved

Volume 3 Issue XII, December 2015
ISSN: 2321-9653
International Journal for Research in Applied Science & Engineering Technology (IJRASET)

C. Nozzle

A nozzle is a device intended to manage the direction or distinctiveness of a fluid flow i.e. to increase velocity at inlet or exit. A nozzle is regularly a pipe or tube of varying cross sectional area and it can be used to direct or modify the flow of a fluid. Nozzles are commonly used to control the rate of flow, speed, direction, mass, shape, and resulting emerging pressure. The nozzle is a principal part of the rocket engine by which general performance controlled. An unrestrained surface and a well- organised hydraulic structure are because of the design of the nozzle. In case of rocket nozzle combustion to occur around the periphery of a spike is result of its design & ambient pressure works as a controller of hot-exhaust flow produced thrust & then gives shape to adjust it.

Liquid nozzles, such as those from fire tubes, are called converging as the area decreases along the length of the nozzle to increase the velocity. Classic liquid nozzles have a simple conical shape and are designed to a specific ratio of inlet to outlet areas whereas in gas nozzles, the gas density be able to change dramatically from the pressure between the inlet and outlet of the nozzle. At very high gas speeds, this effect is so significant that the basic shape of the nozzle must change to a converging-diverging form. The diverging portion is necessary to accommodate the expansion of the gas as it accelerates to lower pressure. Nozzle basically used to serve three purposes:

Control Flow, Provide Reach, Create Shape

D. Convergent-Divergent Nozzle

These are used to increase the flow of gas to supersonic speeds. There is cross-sectional area first decreases and then increases. The area where the diameter is least is called the throat. once gas enters the converging section, its velocity increases then the gas passes through the throat, it attains sonic velocity and the gas when passes through the divergent nozzle, the velocity increases to supersonic.

E. Primary And Secondary Flow

Jet pumps make use of the pressure energy of a high-pressure fluid flow to advance the pressure & flow of a low-pressure source. They can operate with any incompressible or compressible fluids as the driving (primary) or driven (secondary) flows. The main appearance of an ejector is shown in fig.1. The figure also defines the subscripts used for primary (1), secondary (3). The primary fluid is passed through a nozzle where the pressure energy is converted into kinetic energy. The high-velocity jet entrains the secondary fluid. The two streams mix in the mixing tube, leading to pressure recovery. Further static pressure is recovered in a narrow-angle diffuser downstream of the mixing tube. Primary fluid may be liquid or gas but secondary fluid may be liquid, gas or even multiphase gas.

Augmentation: It is a techniques can be classified either as passive methods, which require no direct application of external power or as active methods, which require external power.

II. METHODOLOGY

Generally the ejector nozzle used in the existing pre cooler is that of the convergent type. In order to evaluate the flow through a modified ejector, the simulation was carried out with replacing the convergent nozzle with a convergent-divergent nozzle(C-D nozzle). With the inlet conditions to the ejector known, the dimensions of the C-D nozzle had to be evaluated. The unknown parameters were the throat and the nozzle exit diameter. It has been assumed that the exit pressure is that of the ambient i.e. 1 bar. Also the calculations are carried out considering choked conditions at the nozzle throat i.e. the flow velocity attains sonic condition at throat, and the flow rate reaches maximum. To do perform the analysis first the model is created with the help of Pro-E 4.0. Three different models for convergent nozzle, convergent-divergent, and ram jet are modeled. The dimensions taken for modeling is presented below in table I

TABLE-I: Modeling Dimension Data

Type	Convergent	Convergent-Divergent	Ram Jet
Inlet Diameter	17.6 mm	17.6 mm	2.5 mm
Exit Diameter	11 mm	19.98 mm	2.5 mm
Throat	-	11 mm	-
Length	26 mm	30 mm	13 mm (Height)

©IJRASET 2015: All Rights are Reserved

Volume 3 Issue XII, December 2015
ISSN: 2321-9653

Dimensional Data were calculated mathematically with reference to the established inlet conditions as pressure at inlet as7.7 bar (abs), temperature as mass flow rate as 843 K and 12 kg/min respectively. With the inlet conditions established, the dimension are calculated using the equations for critical conditions which yields the result of Critical pressure and temperature values as 406791 Pa and 710.54 K with critical velocity 534 m/s

Further throat area calculated as $1.8760*10^{-}4$ m^2. The exit pressure is considered to be ambient 1 bar for an ideal gas, and also considering the process to be adiabatic gives exit temperature, velocity at exit, exit area using continuity equation as 476.05 K, 870 m/s. Thus inlet, throat and outlet radii for C-D section obtained as 8.8 mm, 7.72 mm and 9.98 mm respectively.

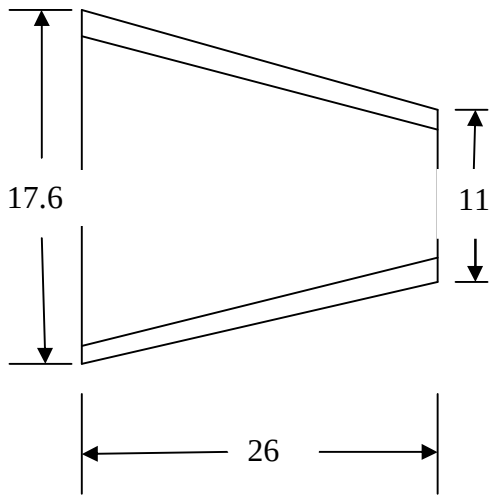

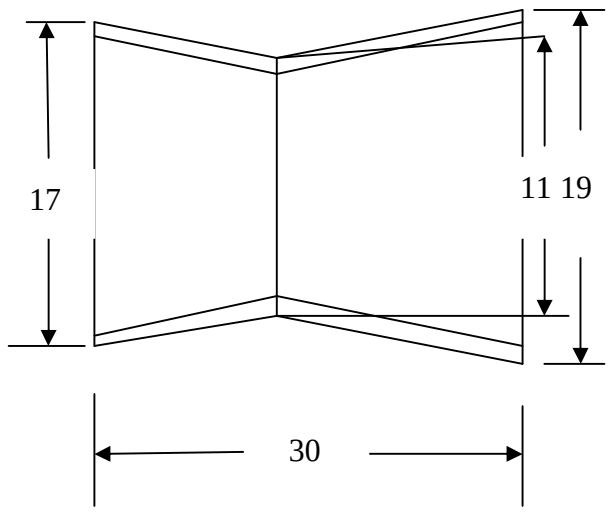

Fig.2: convergent nozzle used for simulation

Fig.3: convergent-divergent nozzle used for simulation

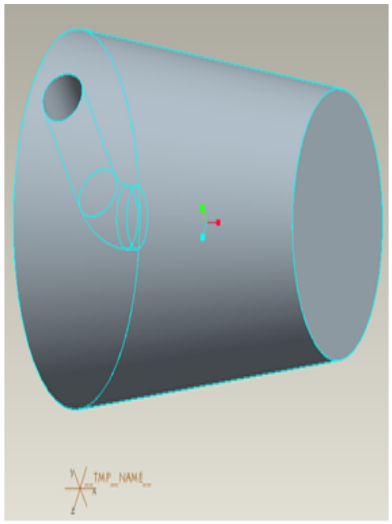

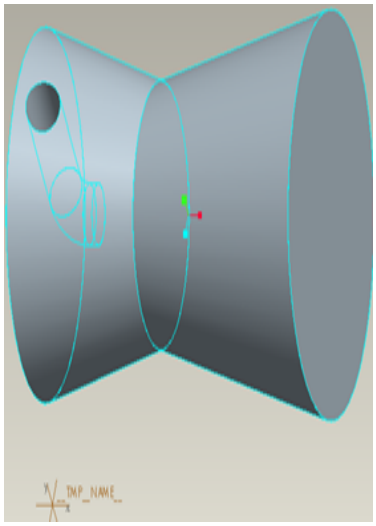

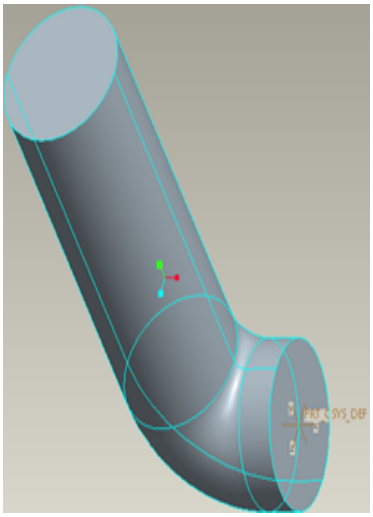

Fig.4 Modeling of Converging Nozzle

Fig.5 Converging-Diverging Nozzle Model

Fig.6 Modeling of Ram Jet

©IJRASET 2015: All Rights are Reserved

Volume 3 Issue XII, December 2015
ISSN: 2321-9653
International Journal for Research in Applied Science & Engineering Technology (IJRASET)

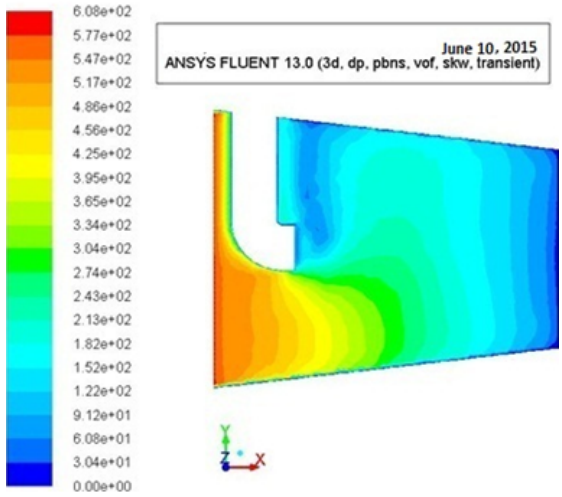

Fig.7: Velocity contour of convergent nozzle

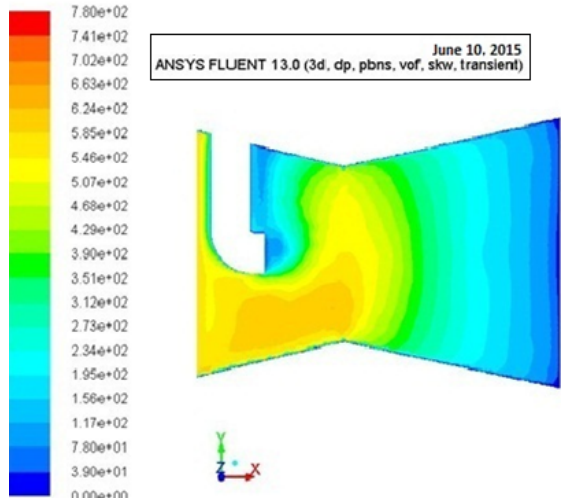

Fig.8: velocity contour of convergent-divergent nozzle

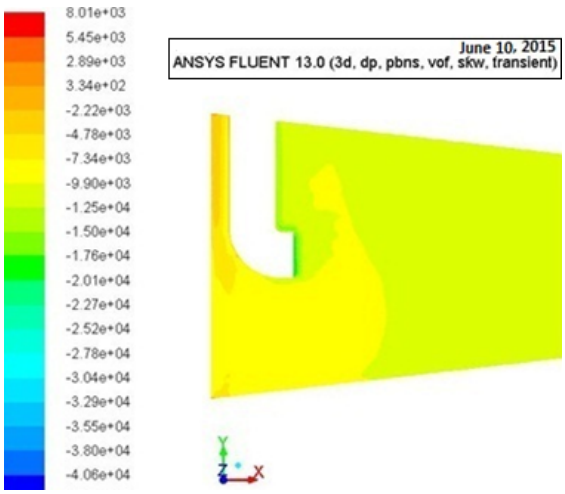

Fig.9: Pressure contour of convergent-divergent nozzle

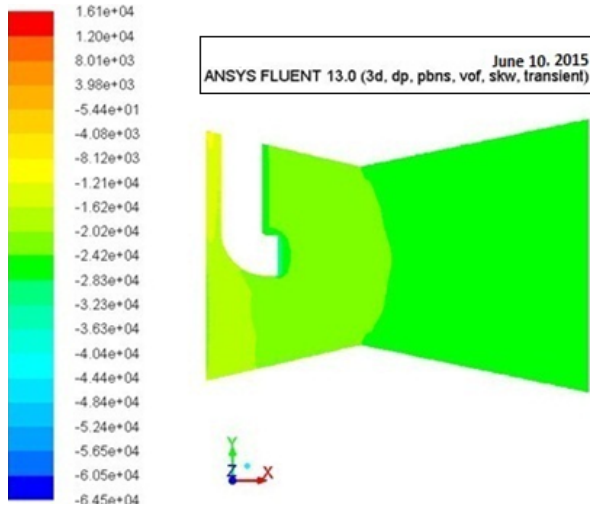

Fig.10: Pressure contour of convergent nozzle

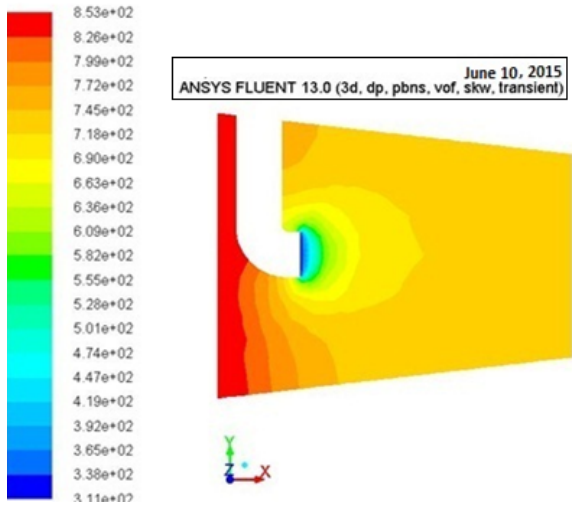

Fig.11: Temperature contour of convergent nozzle

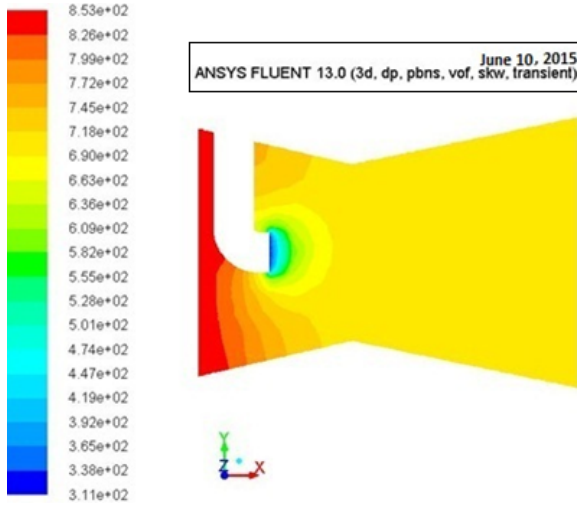

Fig.12: Temperature contour of convergent-divergent nozzle

©IJRASET 2015: All Rights are Reserved

Volume 3 Issue XII, December 2015
ISSN: 2321-9653
International Journal for Research in Applied Science & Engineering Technology (IJRASET)

III. RESULTS

A. Velocity Results

In this configuration according to above fig.7 initial velocity is 585.43 m/s and the velocity at the exit is 405 m/s. the decrement in the speed is approximately 30.7%, but at the same time the out velocity is greater than the standard value. According to the above fig.8 initial velocity is 585.43 m/s and the velocity at the exit is 260 m/s the decrement in speed is 55.5% but at the same time output velocity is greater than the standard value.

B. Pressure Results

In convergent nozzle initially at the inlet part of the nozzle the pressure is very high as the velocity is starting to increase and then at the end to decreases. Now at the end part of convergent there is a sudden drop in pressure as the velocity considerably decreases. Whereas for convergent-divergent at the inlet or the converging part of the nozzle pressure is extremely high, as the velocity is begins to increase and then at throat there is a slight drop of pressure due to increment of velocity at the throat. Currently at the last part of divergent nozzle, there is a abrupt drop of pressure significantly increased as shown in fig.9 & 10.

C. Temperature Results

In fig.11of convergent nozzle shows initial temperature as 853K and the exit temperature of convergent is 745K. In the above figure it is clearly seen that due to sudden increase in velocity there is a drop in temperature at the end of convergent. Temperature contour shows 853K at inlet for convergent divergent nozzle and the exit temperature is 672K. In this above fig.12 it is clearly shown that the temperature contour drastically decreases. At the throat position temperature slightly decreases but at the end of divergent portion it is drastically decreases.

IV.CONCLUSIONS

From the simulation results obtained we find that the mass augmentation ratio is more when convergent –divergent nozzle was used in place of convergent nozzle. The former gave a value of 1.49 while the later 1.07. This shows that for a given quantity of primary mass flow C-D nozzle induces a larger quantity of ram air than conversion model. Primary flows obtained for convergent and convergent-divergent nozzle are 0.118 kg/s & 0.192 kg/s respectively whereas for secondary flow value is 0.126 kg/s & 0.285 kg/s for the two selected type of nozzles. The most important and final result obtained for mass augmentation ratio are 1.07 (convergent) & 1.49(convergent-divergent).Thus we can obtain better effectiveness of the pre-cooler heat exchanger if convergent-divergent nozzle is used instead of the convergent nozzle already in use. Since the ram air flow will be more the efficiency of heat exchanger will be more and bleed air will be cooled to temperatures well within design ranges. Hence the pre-coolers can perform better when the aircraft is on ground, and even when the ambient temperatures are high.

V. ACKNOWLEDGMENT

Authors would like to thank the management of Indur Institute of Engineering & Technology, Siddipet (Tel) for their support and encouragement to carry out this work in a peaceful and healthy environment.

REFERENCES

[1] H.G. Elrod and M.D. Annapolis, “The theory of ejectors,” Journal of Applied Mechanics, vol. 4, pp. 570-578, July 1993.
[2] J.H. Keenan and E.P. Neumann, “A simple air ejector,” Journal of Applied Mechanics, vol. ED-11, pp. 34-39, Jan. 1959.
[3] C. D. Mikkelsen, M. R. Sandberg, A. L. Addy,, “Theoretical and experimental analysis of the constant-area, supersonic-supersonic ejector” International Journal of Mechanical, Aerospace, Industrial, Mechatronic and Manufacturing Engineering Vol:3, No:2, 2009
[4] S. Daneshmand, C. Aghanajafi, and A. Bahrami “Prediction of Base Pressure in a Supersonic Ejector-Diffuser System Using CESE Method”, AIAA Journal, 08/1982; 20(8):1097-1103. DOI: 10.2514/3.51169
[5] Joseph Yen, Wagner, “Analytical and Experimental Methods of Design for Supersonic Two-Stage Ejector”2010, World Academy of Science, Engineering and Technology

AUTHOR BIOGRAPHY

First author Milan Motta is an academic in a leading institute of one of southern Indian states in the region of Hyderabad Telangana. He has done in bachelor’s degree in Mechanical engineering from Pt. R.S.U, Raipur (C.G.), Masters Degree in CAD/CAM Robotics from SVTU, Bhilai and Masters of Business administration with specialization in Operations Management from IGNOU and pursuing his Doctorate program with specialization in

©IJRASET 2015: All Rights are Reserved

Volume 3 Issue XII, December 2015
ISSN: 2321-9653

Micro and Macro Structural Analysis of materials from University of Petroleum and Energy Studies, Dehradun He has participated in many national and international conferences and contributed various research papers published in proceedings and, some of which have been published in the renowned Journals.

.

©IJRASET 2015: All Rights are Reserved

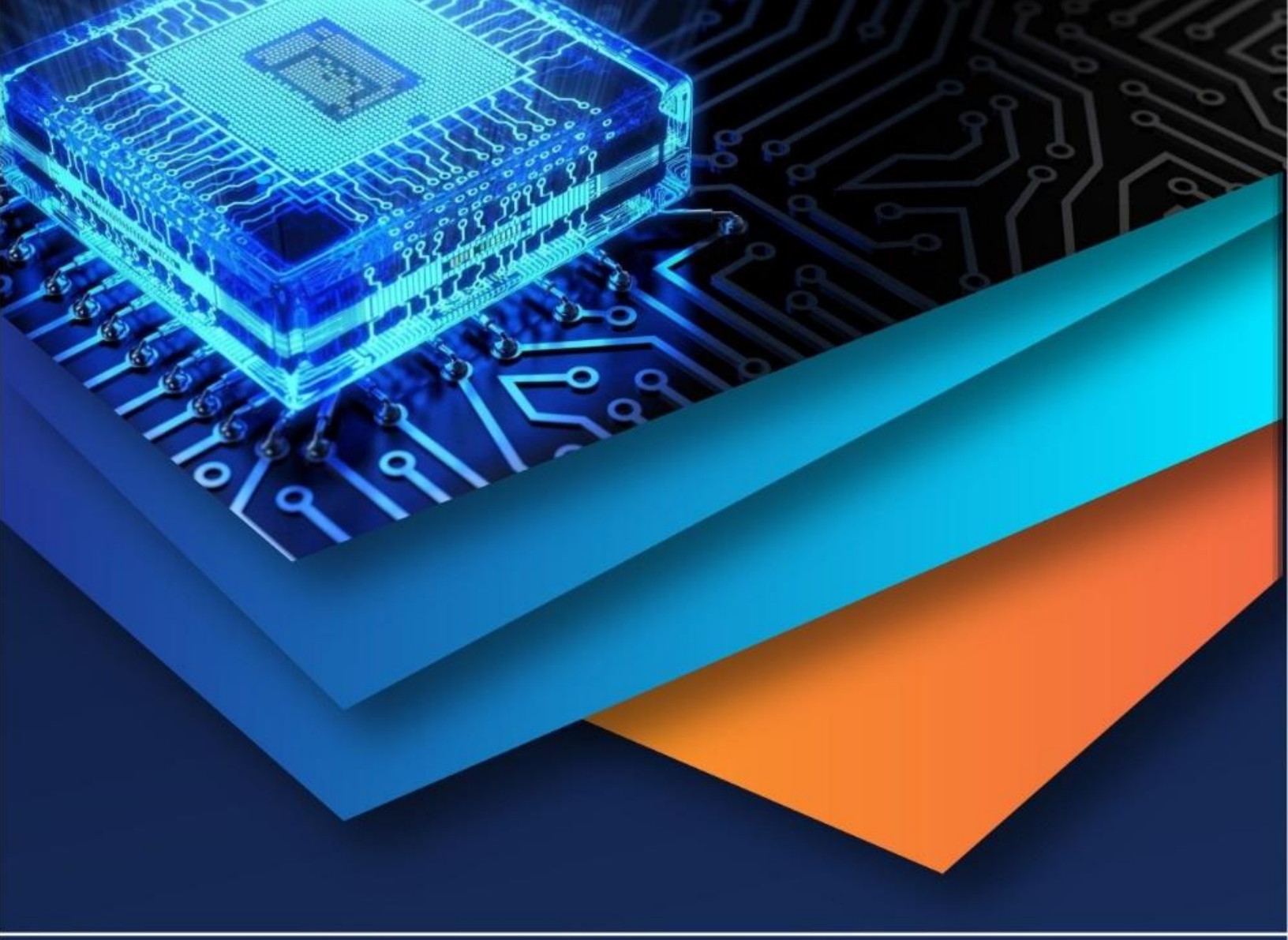

10.22214/IJRASET

45.98

IMPACT FACTOR: 7.129

IMPACT FACTOR: 7.429

INTERNATIONAL JOURNAL FOR RESEARCH

IN APPLIED SCIENCE & ENGINEERING TECHNOLOGY

Call : 08813907089 (24*7 Support on Whatsapp)