iJRASET
International Journal For Research in
Applied Science and Engineering Technology

INTERNATIONAL JOURNAL FOR RESEARCH

IN APPLIED SCIENCE & ENGINEERING TECHNOLOGY

Volume: 4 **Issue:** XII **Month of publication:** December 2016

DOI:

www.ijraset.com

Call: 08813907089 | E-mail ID: ijraset@gmail.com

Volume 4 Issue XII, December 2016
ISSN: 2321-9653
International Journal for Research in Applied Science & Engineering Technology (IJRASET)

A New Fuzzy Adaptive Voltage Controller for a Three-Phase Inverter in a Standalone Distributed Generation System

M. Jitendra Vikas[1], Prof. R. Kiranmayi[2], T. Manohar[3]
[1]*P. G Student, JNTUA College of Engineering, Anantapur, A. P, India*
[2]*Professor & HOD, Electrical Engineering Department, JNTUA College of Engineering, Anantapur, A.P, India*
[3]*Lecturer in Electrical Engineering Department, JNTUA College of Engineering, Anantapur, A.P, India*

Abstract- A New Fuzzy Adaptive voltage control method for the three-phase inverter in a Stand-alone Distributed generation system, which is fed by renewable energy resources in remote locations, is proposed in this paper. The technique uses adaption control and state feedback control to achieve the required performance. State space model of the inverter is derived to design the controller. The algorithm is easy to implement, and it is very robust to sudden disturbances in load. This control strategy ensures the most desired voltage regulation performance, under different types of loads such as balanced load, unbalanced load, and nonlinear load. The simulation results of the system under different types of loads are presented and are compared to the corresponding performances of the Non-Fuzzy system to validate the effectiveness of the proposed control scheme. This strategy achieves good voltage regulation in terms of zero steady state error and low THD for sudden changes under different load conditions. The system is simulated and its performance is evaluated using Matlab environment.
Keywords – Adaptive voltage control, Distributed generation system (DGS), Fuzzy logic controller (FLC), voltage source inverter (VSI), Stand-alone operation.

I. INTRODUCTION

Now-a-days, The need for Distributed generation systems, which are energized by renewable energy sources such as wind turbines, solar cells etc., is growing significantly, as they can economically supply the increasing demand of electric power due to the rapid growth of the economy and strict environmental regulations concerning greenhouse effect [2]–[9]. In [1], an Adaptive voltage controller for a three phase inverter is implemented for improving Voltage regulation performance using adaption and feedback control techniques. The system proposed in [1] delivered good voltage regulation to the DG system. However, The Fuzzy adaptive voltage control technique proposed in this paper has achieved lower Total Harmonic Distortion than the controller in [1] for various types of loads. Based on practical needs, the DGSs may be interconnected in parallel with the electric utility grid and provide maximum electric power to the grid. There are some remote locations where the connection to the grid is not economical or impractical. In that cases, small scaled standalone DGSs are the only efficient and economical options. In such DGSs, depending on power demand, the DGSs may operate in parallel or independently. In both the cases, a stable operation of each DGS unit is expected as the stability of the parallel operating DGSs where the proper sharing of load by each unit has been one of main research topics since the voltage controller was commonly used in a single DGS unit or multiple DGS units for the first time. Because of the reason above, the voltage controller design for a single DGS unit, which can guarantee a good voltage regulation under unbalanced and nonlinear loads, is an interesting topic in the field of the DGSs control. To improve the quality of output voltage of inverter, many researchers are working on designing the controllers for dc–ac power converters. In [10], a robust controller is developed for balanced and unbalanced systems, which considers the uncertainties of the load parameters. However, nonlinear load is not fully addressed. In [11], an alternative control strategy with a feed-forward compensation component can significantly minimize the effect of load disturbance and make the controller design simple. Though, the application of this method is mainly limited to balanced load conditions. In [12], a current control technique based on the spatial repetitive control is applied to a single-phase inverter and it also improves the performance of the current controller by estimating the disturbances. Although this control can obtain good results under non-linear load, it may not guarantee a good voltage tracking capacity for a three-phase system. The method proposed in [1] uses adaptive controller for voltage regulation and delivers good performance to the system. However, the method proposed in this paper can achieve better voltage regulation than the method in [1]. To confirm the feasibility of the proposed control algorithm, simulations are performed through Matlab software and results are evaluated.

©IJRASET: All Rights are Reserved

Volume 4 Issue XII, December 2016
ISSN: 2321-9653
International Journal for Research in Applied Science & Engineering Technology (IJRASET)

Chapter 2 explains modeling of the proposed theory. It is divided into two parts (a) State-space model of a Load side Inverter. & (b) Design of adaptive voltage control system. In Chapter 3, Fuzzy logic controller used in this model is explained briefly. In Chapter 4, simulation results are shown, which ensures the improvement of the proposed technique and betterment over the method used in [1].

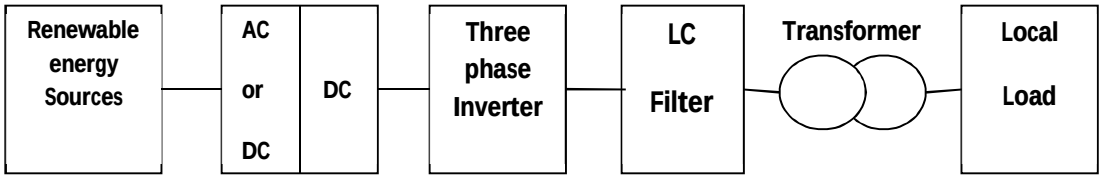

Fig -1: Block diagram of a standalone DGS using renewable energy sources.

II. MODELING OF THE PROPOSED THEORY

A. Derivation of State-space model of the inverter

State-space model of the Load-Side Inverter is derived to construct the controller proposed in this paper. Fig. 1 shows the block diagram model of a simple stand-alone DGSs fed by renewable energy sources. The DGS is mainly divided into six parts: an energy source, an ac–dc power converter in wind turbine systems or a dc–dc boost converter in solar pv systems, a three-phase dc–ac inverter, an LC output filter, an isolation transformer, and a local load. This paper considers replacing renewable energy source and an ac–dc power converter or a dc–dc boost converter with a stiff dc voltage source (V_{dc}) as it mainly concerns the designing of the adaptive voltage controller for different types of loads such as balanced load, unbalanced load, and nonlinear load. Also, the above consideration of using a dc voltage source as supply can be acceptable because the front converter (i.e., an ac–dc power converter or a dc–dc boost converter) can quicly recover the reduced dc-link voltage when a sudden load changes occurs. Assuming that the customers need a low voltage ac source (below 600v) which DGS can generate on their own, Isolation transformer is not used to reduce cost. Fig. 2 presents a schematic diagram of a three phase inverter with LC filter used in Stand-alone DGS. The inverter circuit consists of a dc voltage source (V_{dc}), a three-phase inverter (S_1 to S_6), an output filter (L_f and C_f), and a three-phase resistive load (R_L). The LC output filter is significant in this circuit because it accounts for eliminating harmonic components from the inverter output voltage, which occur due to high-frequency switching actions. By using Kirchhoff's voltage law and Kirchhoff's current law, the LC output filter shown in Fig. 2 yields the following state equations:

$$\left.\begin{aligned} \frac{dV_L}{dt} &= \frac{1}{C_f} I_i - \frac{1}{C_f} I_L \\ T_i \frac{dI_i}{dt} &= -\frac{1}{L_f} T_i V_L + \frac{1}{L_f} V_i \end{aligned}\right\} \quad (1)$$

Where $$T_i = \begin{bmatrix} 1 & -1 & 0 \\ 0 & 1 & -1 \\ -1 & 0 & 1 \end{bmatrix}$$

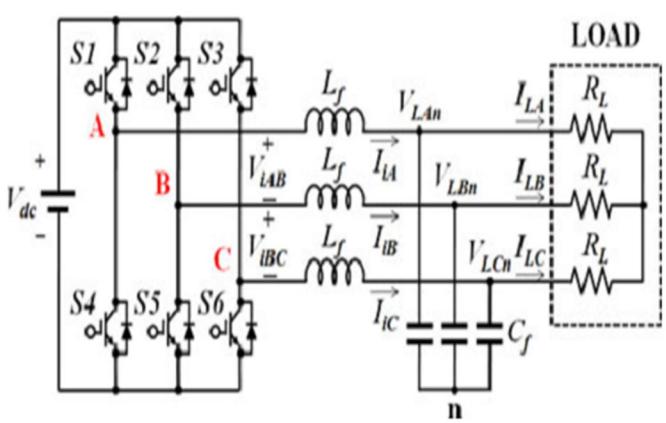

Fig -2: Schematic diagram of a three-phase dc to ac inverter with an LC filter in a standalone application

The state equations (1) in the stationary abc reference frame transformed to the following equations in the synchronously rotating d–

©IJRASET: All Rights Reserved

Volume 4 Issue XII, December 2016
ISSN: 2321-9653

q reference frame:

$$\left.\begin{aligned} \dot{V}_{Ld} &= \omega V_{Lq} + k_1 I_{id} - k_1 I_{Ld} \\ \dot{V}_{Lq} &= -\omega V_{Lq} + k_1 I_{iq} - k_1 I_{Lq} \\ \dot{I}_{id} &= \omega I_{iq} - k_2 V_{Ld} + k_3 V_{id} + k_4 V_{iq} \\ \dot{I}_{iq} &= -\omega I_{id} - k_2 V_{Lq} - k_4 V_{id} + k_3 V_{iq} \end{aligned}\right\} \quad (2)$$

Where ω is the angular frequency (ω=2π·f), f is the fundamental frequency of output voltage or current, and

$$k_1 = \frac{1}{C_f}, \quad k_2 = \frac{1}{L_f}, \quad k_3 = \frac{1}{2L_f}, \quad k_4 = \frac{1}{2\sqrt{3}L_f}.$$

The following assumptions are used to design an adaptive voltage controller:

1) The desired load d–q axis voltages (V_{Lqr} and V_{Ldr}) are considered as constant during a small sampling period.

2) The load d–q axis currents (I_{Ld} and I_{Lq}) vary slowly during a small sampling period as indicated in [13]. The reference values (I^*_{idr} and I^*_{iqr}) of the inverter currents (I_{id} and I_{iq}) in the d–q axis are denoted as:

$$I^*_{idr} = I_{Ld} - \frac{1}{k_1}\omega V_{Lqr}, \quad I^*_{iqr} = I_{Lq} + \frac{1}{k_1}\omega V_{Ldr} \quad (3)$$

These inverter d–q axis current references can be confined within the maximum allowable values as given in [14]:

$$I_{id(q)r} = \begin{cases} I^*_{d(q)r} & \text{If} \left|I^*_{d(q)r}\right| \le I_{max} \\ \frac{I^*_{d(q)r}}{\left|I^*_{d(q)r}\right|} I_{max} & \text{If} \left|I^*_{d(q)r}\right| > I_{max} \end{cases} \quad (4)$$

Where I_{max} represents the maximum allowable magnitude of the inverter currents. The output filter capacitance C_f usually satisfies $0<C_f<1$, i.e., $|k| < \infty$. Thus we may use the assumption $|k_1|\pm|\Delta k_1|<\infty$ leading to the following equations:

$$\left.\begin{aligned} I_{idr} &= I_{Ld} - \frac{1}{k_1}\omega V_{Lqr} \approx I_{Ld} - \frac{1}{k_1+\Delta k_1}\omega V_{Lqr} \\ I_{iqr} &= I_{Lq} + \frac{1}{k_1}\omega V_{Ldr} \approx I_{Lq} + \frac{1}{k_1+\Delta k_1}\omega V_{Ldr} \end{aligned}\right\} \quad (5)$$

Here Δk_1 represents the imprecision of the parameter k_1. From the equations (1) to (5) the model is derived in [1], which is as below.

$$\left.\begin{aligned} \dot{x}_1 &= \omega x_2 + k_1 x_3 \\ \dot{x}_2 &= -\omega x_1 + k_1 x_4 \\ \dot{x}_3 &= k_3 V_{id} + k_4 V_{iq} + \Delta k_3 V_{id} + \Delta k_4 V_{iq} \\ &\quad -(k_2 + \Delta k_2) V_{Ld} + \omega I_{iq} \\ \dot{x}_4 &= -k_4 V_{id} + k_3 V_{iq} - \Delta k_4 V_{id} + \Delta k_3 V_{iq} \\ &\quad -(k_2 + \Delta k_2) V_{Lq} - \omega I_{id} \end{aligned}\right\} \quad (6)$$

Where Δk_1 to Δk_4 denotes the uncertainties in four parameters (k_1 to k_4) respectively.

B. Adaptive Voltage Controller Design and Stability Analysis

The control inputs V_{id} and V_{iq} can be divided into two control components, respectively:

$$V_{id} = V_{id1} + V_{id2}, \quad V_{iq} = V_{iq1} + V_{iq2} \quad (7)$$

Here V_{id1} and V_{iq1} are the feedback control components to stabilize the error dynamics of the system, whereas V_{id2} and V_{iq2} are the

©IJRASET: All Rights Reserved

Volume 4 Issue XII, December 2016
ISSN: 2321-9653

nonlinear compensating control components given by

$$\left.\begin{aligned} V_{id2} &= \frac{-k_4\omega I_{id} - k_3\omega I_{iq}}{(k_3^2 + k_4^2)} \\ V_{iq2} &= \frac{-k_4\omega I_{iq} + k_3\omega I_{id}}{(k_3^2 + k_4^2)} \end{aligned}\right\} \quad (8)$$

Referring to (7) and (8), the system model (6) can be rearranged as the following:

$$\left.\begin{aligned} \dot{x}_1 &= \omega x_2 + k_1 x_3 + \Delta k_1 x_3 \\ \dot{x}_2 &= -\omega x_1 + k_1 x_4 + \Delta k_1 x_4 \\ \dot{x}_3 &= k_3 V_{id1} + k_4 V_{iq1} + \Delta k_3 f_1(x,t) - \Delta k_4 f_2(x,t) \\ \dot{x}_4 &= -k_4 V_{id1} + k_3 V_{iq1} - \Delta k_4 f_1(x,t) + \Delta k_3 f_2(x,t) \end{aligned}\right\} \quad (9)$$

$$\text{where} \quad \begin{aligned} f_1(x,t) &= a_1 V_{id} + a_2 V_{iq} + a_3 V_{Ld} \\ f_2(x,t) &= a_4 V_{id} + a_5 V_{iq} + a_6 V_{Ld} \end{aligned}$$

in which $a_1, a_2, \ldots a_6$ are unknown constants,

$$a_1 = -a_5 = -\frac{k_3\Delta k_3 + k_4\Delta k_4}{(k_3^2 + k_4^2)}$$
$$a_2 = -a_4 = \frac{k_4\Delta k_3 - k_3\Delta k_4}{(k_3^2 + k_4^2)}$$
$$a_3 = a_6 = k_2 + \Delta k_2$$

Thus, the model (9) can be rewritten in the state-space form as

$$\dot{x} = (A + \Delta A)x + B[u - f(x,t)] \qquad (10)$$

Where

$$f(x,t) = [f_1(x,t)\ f_2(x,t)]^T = w\Pi^*$$

$$A = \begin{bmatrix} 0 & \omega & k_1 & 0 \\ -\omega & 0 & 0 & k_1 \\ 0 & 0 & 0 & 0 \\ 0 & 0 & 0 & 0 \end{bmatrix}$$

$$\Delta A = \begin{bmatrix} 0 & 0 & \Delta k_1 & 0 \\ 0 & 0 & 0 & \Delta k_1 \\ 0 & 0 & 0 & 0 \\ 0 & 0 & 0 & 0 \end{bmatrix} = EF\Delta k_1$$

$$B = \begin{bmatrix} 0 & 0 \\ 0 & 0 \\ k_3 & k_4 \\ -k_4 & k_3 \end{bmatrix}, E = \begin{bmatrix} 1 & 0 \\ 0 & 1 \\ 0 & 0 \\ 0 & 0 \end{bmatrix}$$

$$F^T = \begin{bmatrix} 0 & 0 \\ 0 & 0 \\ 1 & 0 \\ 0 & 1 \end{bmatrix}, x = \begin{bmatrix} x_1 \\ x_2 \\ x_3 \\ x_4 \end{bmatrix}, u = \begin{bmatrix} V_{id1} \\ V_{iq1} \end{bmatrix}$$

$$W = \begin{bmatrix} V_{id} & V_{iq} & V_{id} \\ V_{iq} & -V_{id} & V_{id} \end{bmatrix} \quad \Pi^* = [a_1\ a_2\ a_3]^T$$

©IJRASET: All Rights Reserved

Volume 4 Issue XII, December 2016
ISSN: 2321-9653
International Journal for Research in Applied Science & Engineering Technology (IJRASET)

Suppose that there exists a positive definite matrix $P \in R_{4\times4}$ satisfying the following inequality:

$$(A + \Delta A)^T P + P(A + \Delta A) + Q - 2PBR^{-1}B^T P < 0 \quad (11)$$

Where $Q \in R_{4\times4}$ and $R \in R_{2\times2}$ are positive definite matrices. The above inequality (11) is satisfied if the following inequality holds for some positive ρ:

$$A^T P + PA + Q - 2PBR^{-1}B^T P + \rho PEE^T P + \frac{1}{\rho}F^T F\Delta k_1^2 < 0 \qquad (12)$$

where the following inequality is used

$$A^T P + P\Delta A = \Delta k_1 F^T E^T P + \Delta k_1 PEF \leq \rho PEE^T P + \frac{1}{\rho}F^T F\Delta k_1^2$$

Assume that $|\Delta k_1| \leq \zeta$ for some known positive constant ζ; then inequality (12) is satisfied if the following Riccati-like inequality has a positive definite solution matrix $P \in R_{4\times4}$:

$$A^T P + PA + Q - 2PBR^{-1}B^T P + \rho PEE^T P + \frac{1}{\rho}F^T F\Delta k_1^2 < 0 \quad (13)$$

Suppose that $|\Delta k1| \leq \zeta$ for some known positive constant ζ and the Riccati-like inequality (13) is feasible then the controller μ can make the error dynamics x converge to zero: [1]

$$u = -Kx + W\pi \qquad (14)$$

Where $K = R^{-1} B^T P$ is a gain matrix, Π is estimated value of Π^*, and the adaptive control law is given by

$$\dot{\pi} = -\Gamma W^T \sigma \qquad (15)$$
$$\Gamma diag(\gamma_i), \gamma_i > 0, i = 1, \ldots..3 \;\; and \; \sigma = B^T Px$$

The values of P and K are taken from [1]. This adaptation law can cover other types of system uncertainties such as the load disturbances (i.e., sudden load changes & unbalanced load, etc.) and unmodeled terms (i.e., parasite resistance of wires and filter inductors, nonlinear characteristics of switching devices, and filter inductors, etc.), by extending the proposed adaptive control terms. Assume that $f_1(x, t)$ and $f_2(x, t)$ are represented below:

$$f_1(x,t) = a_1 V_{id} + a_2 V_{iq} + a_3 V_{Ld} + d_1$$
$$f_2(x,t) = a_4 V_{id} + a_5 V_{iq} + a_6 V_{Lq} + d_2$$

Where d_1 and d_2 denote some uncertainties such as the load disturbances etc. The proposed control terms are:

$$\Pi^* = -\Gamma W^T \sigma, \qquad \text{where } \sigma = B^T Px$$
$$\Gamma = diag(\gamma_i), \gamma_i > 0, i = 1 \ldots.5$$
$$W = \begin{bmatrix} V_{id} & V_{iq} & V_{Ld} & 1 & 0 \\ V_{iq} & -V_{id} & V_{Lq} & 0 & 1 \end{bmatrix}$$

Note that Π is the estimated value of Π^* defined as

$$\Pi^* = [a_1 \;\; a_2 \;\; a_3 \;\; d_1 \;\; d_2]^T$$

©IJRASET: All Rights are Reserved

Volume 4 Issue XII, December 2016
ISSN: 2321-9653
International Journal for Research in Applied Science & Engineering Technology (IJRASET)

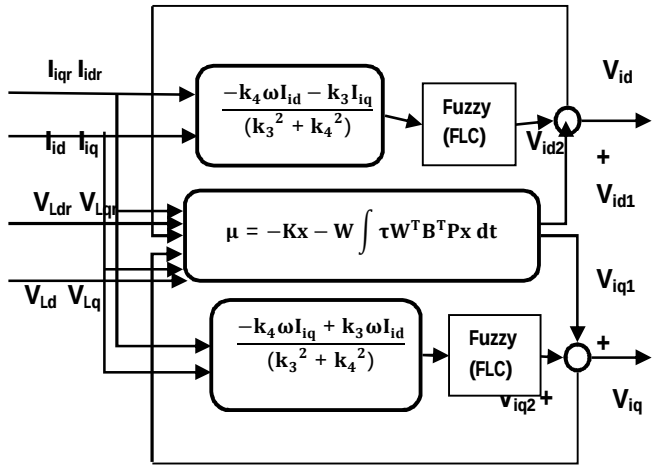

Fig -3: Block diagram of the proposed Fuzzy-adaptive voltage controller

III. FUZZY LOGIC CONTROLLER

In FLC, basic control action is determined by a set of linguistic rules. These rules are determined by the system. Since the numerical variables are converted into linguistic variables, mathematical modeling of the system is not required in Fuzzy Control. The FLC comprises of three parts: fuzzification, inference engine and defuzzification. The FC is characterized as 1. seven fuzzy sets for each input and output. 2. Triangular membership functions for simplicity. 3. Fuzzification using continuous universe of discourse. 4. Implication using mamdani model. 5. Defuzzification

A. Fuzzification

Membership function values are assigned to the linguistic variables, using seven fuzzy subsets: NB (Negative Big), NM (Negative Medium), NS (Negative Small), ZE (Zero), PS (Positive Small), PM (Positive Medium), and PB (Positive Big). The Partition of fuzzy subsets and the shape of membership $C_E(k)$ & E(k) function adapt the shape up to the system. The value of input and change in input are normalized by an input scaling factor.

In this system the input scaling factor has been designed such that input values are between -1 and +1. The triangular shape of the membership function of this arrangement presumes that for any particular E(k) input there is only one dominant fuzzy subset. The change in input for the FLC is given as $C_E(k) = E(k) - E(k-1)$.

TABLE I: Fuzzy Rules

Change in error	Error						
	NB	NM	NS	Z	PS	PM	PB
NB	PB	PB	PB	PM	PM	PZ	Z
NM	PB	PB	PM	PM	PS	Z	Z
NS	PB	PM	PS	PS	Z	NM	NB
Z	PB	PM	PS	Z	NS	NM	NB
PS	PM	PS	Z	NS	NM	NB	NB
PM	PS	Z	NS	NM	NM	NB	NB
PB	Z	NS	NM	NM	NB	NB	NB

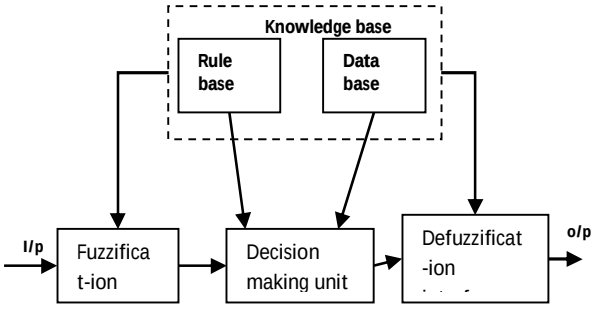

Fig -4: Block diagram of Fuzzy logic controller

B. Inference Method

Several composition methods such as Max–Min and Max-Dot have been proposed in the literature. In this paper Min method is

©IJRASET: All Rights are Reserved

Volume 4 Issue XII, December 2016
ISSN: 2321-9653
International Journal for Research in Applied Science & Engineering Technology (IJRASET)

used. The output membership function of each rule is given by the minimum operator and maximum operator. Table 1 shows rule base of the FLC.

C. Defuzzification

As a plant usually requires a non-fuzzy value of control, a defuzzification stage is needed. To compute the output of the FLC, height method is used and the FLC output modifies the control output. Further, the output of FLC controls the switch in the inverter. In DGSs, terminal voltage at the load is required to be maintained. In order to control this, they are sensed and compared with the reference values. To achieve this, the membership functions of FC are: error, change in error and output

The set of FC rules are derived from

$$\mu=-[\alpha E + (1-\alpha)*C]$$

Where α is self-adjustable factor which can regulate the whole operation. E is the error of the system, C is the change in error and μ is the control variable. A large value of error E indicates that given system is not in the balanced state. If the system is unbalanced, the controller should enlarge its control variables to balance the system as early as possible. On the other hand, small value of the error E indicates that the system is near to balanced state. In this technique, fuzzy logic controller output is forwarded to SVPWM, i.e. the fuzzy controller modifies the values of V_{id} and V_{iq} to obtain a better Voltage regulation performance than that of the method in [1].

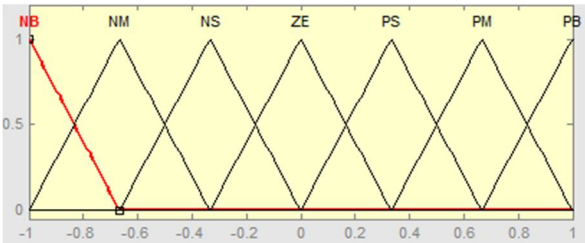

Fig -5: input signal membership functions

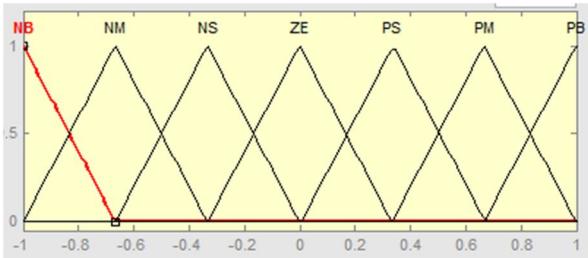

Fig -6: change in signal membership functions

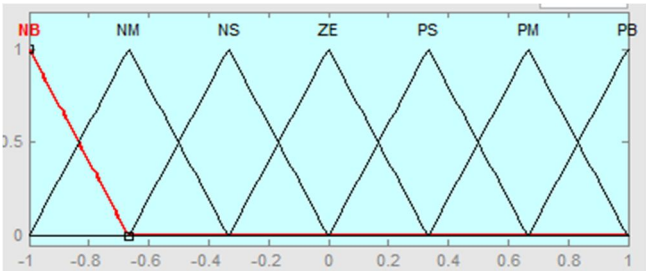

Fig 7. Output variable membership functions

In this paper, a simulated model in MATLAB is considered to implement the proposed control algorithm. Table II gives the nominal parameters for the simulation model.

TABLE II
Parameters of the system considered in the simulated circuit.

Parameters	Values
DGS rated power (P_{rated})	450VA
dc-link voltage (V_{dc})	280V
Load output voltage (V_{Lrms})	110V
Output frequency (f)	60Hz
LC output filter	L_f=10mH, C_f=6μF
Resistive load/unbalanced load	R_L=80 Ω
Non linear load	C_{dc}=3300μF, R_{dc}=500 Ω

©IJRASET: All Rights are Reserved

Volume 4 Issue XII, December 2016
ISSN: 2321-9653
International Journal for Research in Applied Science & Engineering Technology (IJRASET)

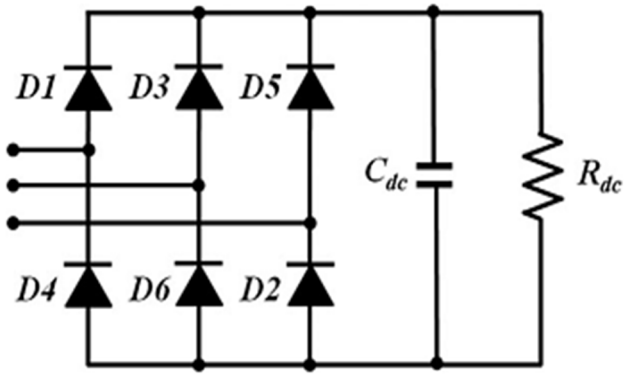

Fig. 8. Circuit diagram of the nonlinear load.

IV. SIMULATION RESULTS

Simulation of the system model is carried out to verify the effectiveness of the proposed fuzzy adaptive control algorithm under the following four conditions:

A. Balanced load (0%→100%)

The balanced resistive load is instantaneously put on the inverter output terminals.

B. Balanced load (100%→0%)

The balanced resistive load is instantaneously removed from the inverter output terminals.

C. Unbalanced load

The unbalanced resistive load is connected to the inverter output terminals, i.e. for instance, only phase C is opened.

D. Non-linear load

A three-phase full-bridge diode rectifier is connected to the inverter output terminals. As shown in Fig. 8, it is also connected in parallel with a capacitor (C)and a resistor (R_{dc}).

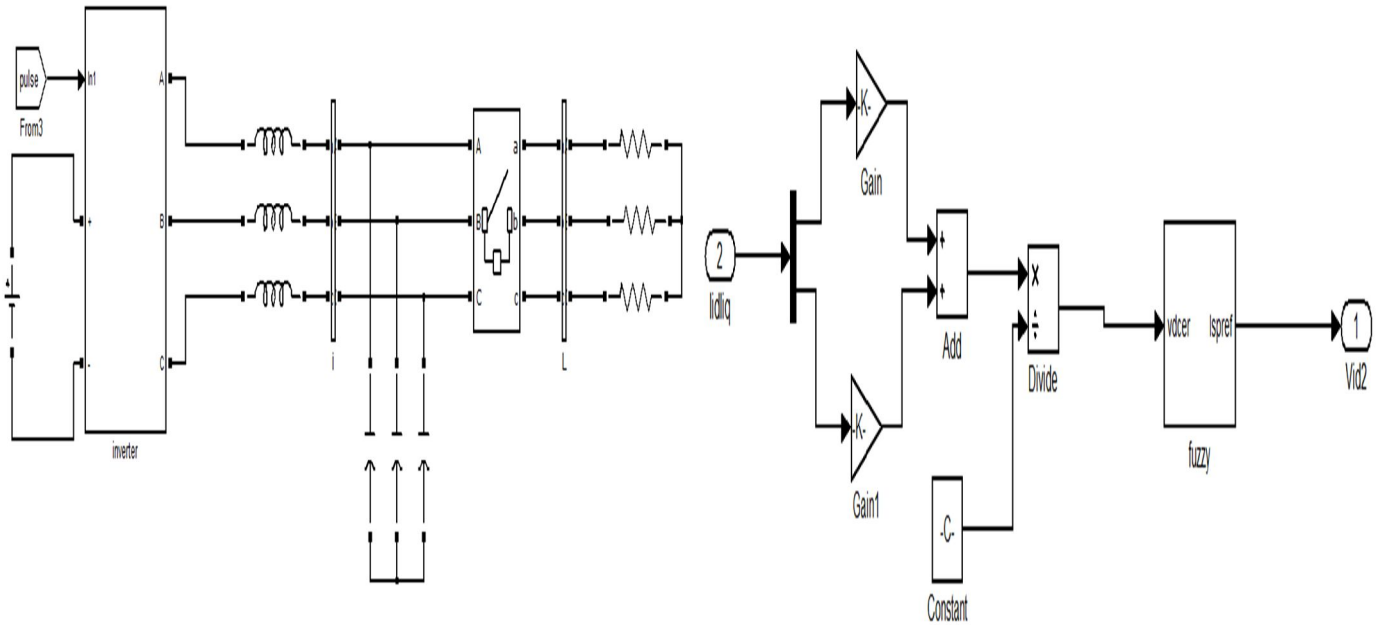

Fig -9: Simulated circuit of the proposed fuzzy adaptive voltage controller

©IJRASET: All Rights are Reserved

Volume 4 Issue XII, December 2016
ISSN: 2321-9653
International Journal for Research in Applied Science & Engineering Technology (IJRASET)

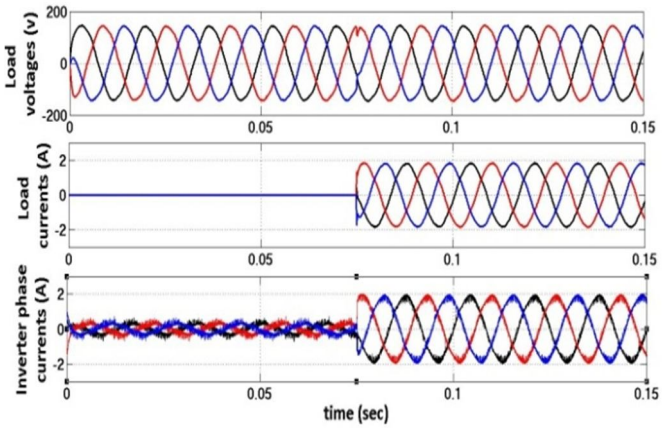

Fig -10(a): Balanced resistive load (0% to 100%).

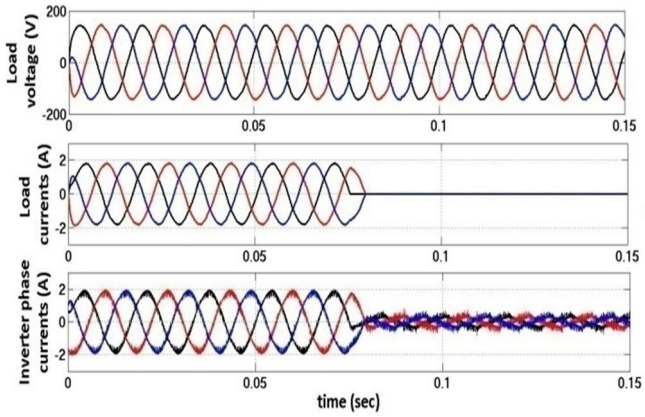

Fig -10(b): Balanced resistive load (100% to 0%).

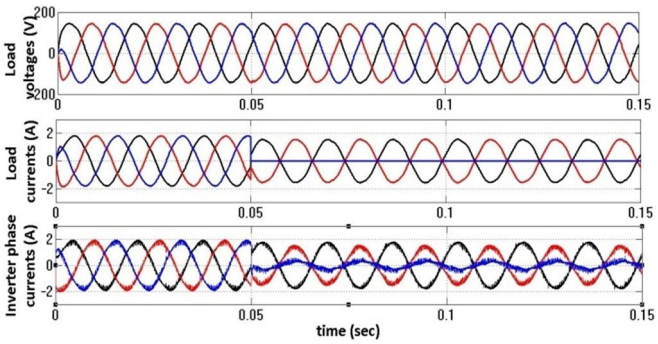

Fig -10. (c) Unbalanced resistive load Fig.

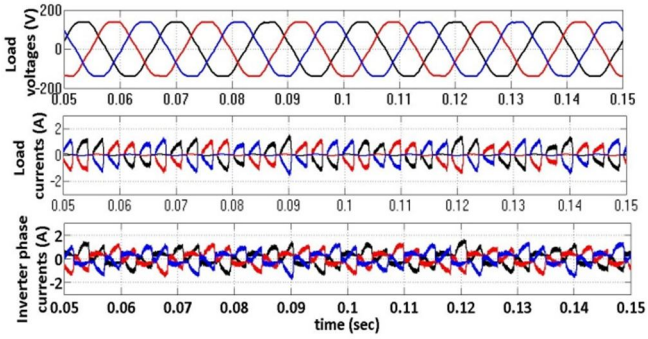

Fig -10 (d) Non linear load.

Fig -10: Simulation results of the Non-fuzzy adaptive voltage controller under four different conditions.

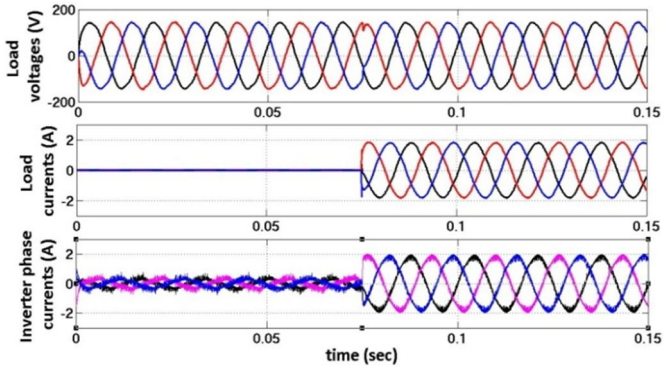

Fig -11. (a) Balanced resistive load (0% to 100%).

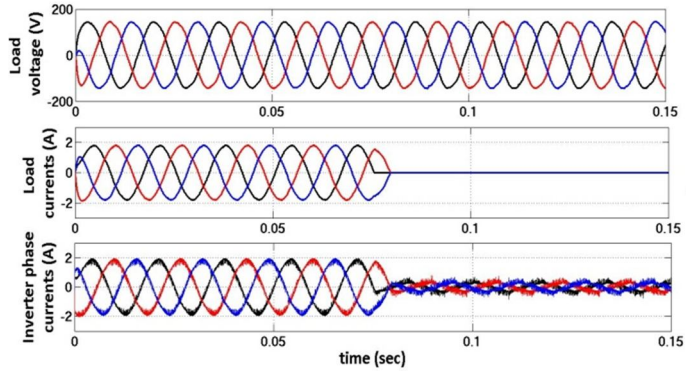

Fig -11. (b) Balanced resistive load (100% to 0%).

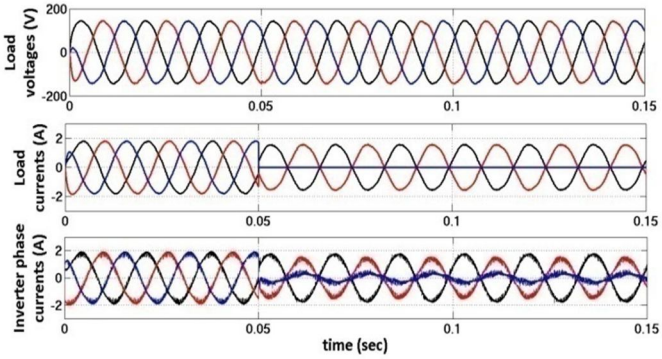

Fig -11. (c) Unbalanced resistive load

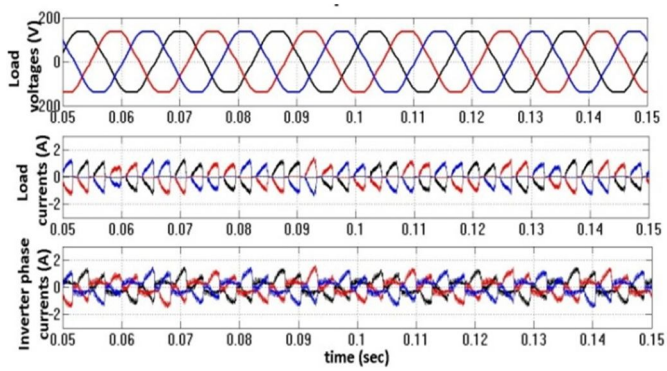

Fig -11. (d) Non linear load

Fig -11: Simulation results of the proposed fuzzy adaptive voltage controller under four different loads

©IJRASET: All Rights are Reserved

Volume 4 Issue XII, December 2016
ISSN: 2321-9653
International Journal for Research in Applied Science & Engineering Technology (IJRASET)

Table –III
Phase voltages and THD values of the Non-fuzzy system

Load Types	Load Output Volatages(V_{rms})			THD (%)
	V_{LAn}	V_{LBn}	V_{LCn}	
No load	109.9	109.7	109.8	0.04
Balanced load	109.3	109.5	109.4	0.045
Unbalanced A&B load	109.7	109.9	109.3	0.043
Non-linear load	108.5	108.6	108.4	0.384

Table-IV
Phase voltages and THD values of the proposed fuzzy adaptive.

Load Types	Load Output Volatages(V_{rms})			THD (%)
	V_{LAn}	V_{LBn}	V_{LCn}	
No load	109.9	109.2	109.5	0.0367
Balanced load	109.6	109.4	109.7	0.038
Unbalanced A&B load	109.2	108.9	109.4	0.0376
Non-linear load	109.4	109.6	108.8	0.0384

It can be obviously observed from the simulation results and the tabulated values that the proposed Fuzzy adaptive voltage control method achieves better voltage tracking performance (i.e., smaller steady-state error and lower THD) under various types of loads (i.e., balanced load, unbalanced load, and nonlinear load) than the corresponding non-fuzzy adaptive control method even though there exist uncertainties of system parameters and sudden load changes.

V. CONCLUSION

This paper presents a Fuzzy adaptive voltage control technique for a three phase stand-alone Distributed Generation System located in remote areas. The proposed control strategy has shown exceptional voltage regulation under various types of loads. The proposed controller is simple to implement and also robust to sudden load disturbances. Finally, the simulation results have demonstrated that the proposed control scheme gives satisfactory voltage regulation performance such as almost zero steady-state error and low THD under various loads (i.e., no load, balanced load, unbalanced load, and nonlinear load) though the sudden load changes exists in the system.

REFERENCES

[1] Jin Woo Jung, Nga Thi Thuy Vu, "A Three Phase Inverter for a Standalone Distributed Generation System: Adaptive Voltage Control Design and Stability Analysis", IEEE Trans on Energy Conversion, vol. 29, no. 1, Mar 2014.
[2] H. K. Kang, C. H. Yoo, I. Y. Chung, D. J. Won, and S. I. Moon, "Intelligent coordination method of multiple distributed resources for harmonic current compensation in a microgrid," J. Elect. Eng. Technol., vol .7, no.6, pp. 834–844, Nov. 2012.
[3] M.Liserre, T.Sauter and J. Y. Hung, "Future energy systems: Integrating renewable energy sources into the smart power grid through industrial electronics," IEEE Ind. Electron. Mag., vol. 4, no. 1, pp. 18–37, Mar. 2010.
[4] S. Bogosyan, "Recent advances in renewable energy employment," IEEE Ind. Electron. Mag., vol. 3, no. 3, pp. 54–55, Sep. 2009.
[5] B. C. Sung, S. H. Lee, J. W. Park, and A. P. S. Meliopoulos, "Adaptive protection algorithm for over current relay in distribution system with DG," J. Elect. Eng. Technol., vol. 8, no. 5, pp. 1002–1011, Sep. 2013.
[6] M. Y. Kim, Y. U. Song, and K. H. Kim, "The advanced voltage regulation method for ULTC in distribution systems with DG," J. Elect. Eng. Technol., vol. 8, no. 4, pp. 737–743, Jul. 2013.
[7] L. Gertmar, L. Liljestrand, and H. Lendenmann, "Wind energy powers that-be successor generation in globalization," IEEE Trans. Energy Conver., vol. 22, no. 1, pp. 13–18, Mar. 2007.
[8] A. Q. Huang, M. L. Crow, G. T. Heydt, J. P. Zheng, and S. J. Dale, "The future renewable electric energy delivery and management (FREEDM) system: The energy internet," Proc. IEEE, vol. 99, no. 1, pp. 133–148, Jan. 2011.
[9] A. Mokhtarpour, H. A. Shayanfar, M. Bathaee, and M. R. Banaei, "Control of a single phase unified power quality conditioner-distributed generation based input output feedback linearization," J. Elect. Eng. Technol., vol. 8, no. 6, pp. 1352–1364, Nov. 2013. IEEE Trans. Power Electronics., vol. 25, no. 2, pp. 399–407, Feb. 2010.
[10] H. Karimi, H. Nikkhajoei, and R. Iravani, "Control of an electronically coupled distributed resource unit subsequent to an islanding event," IEEE Trans. Power Del., vol. 23, no. 1, pp. 493–501, Jan. 2008.
[11] A. Yazdani, "Control of an islanded distributed energy resource unit with load compensating feed-forward," in Proc. IEEE Power Eng. Soc. Gen. Meet., Pittsburgh, PA, USA, Jul. 2008, pp. 1–7.
[12] S. Dasgupta, S. K. Sahoo, and S. K. Panda,"Single-phase inverter control techniques for interfacing renewable energy sources with micro grid—Part I: Parallel-connected inverter topology with active and reactive power flow control along with grid current shaping," IEEE Trans. Power Electron., vol. 26, no. 3, pp. 717–731, Mar. 2011.

©IJRASET: All Rights are Reserved

Volume 4 Issue XII, December 2016
ISSN: 2321-9653

[13] P. Cortes, G. Ortiz, J. I. Yuz, J. Rodriguez, S. Vazquez, and L. G. Franquelo, "Model predictive control of an inverter with output LC filter for UPS applications," IEEE Trans. Ind. Electron., vol.56, no.6, pp. 1875–1883, Jun. 2009.
[14] M. N. Marwali and A. Keyhani, "Control of distributed generation system—Part I: Voltages and currents control," IEEE Trans. Power Electron., vol. 19, no. 6, pp. 1541–1550, Nov. 2004.

M. Jitendra Vikas, completed B. Tech in Electrical and Electronics Engineering in 2014 from K.S.R.M college of Engineering, Kadapa, Affiliated to JNTUA Anantapur. He is currently studying M. Tech in Control Systems, EEE dept, JNTUA College of Engineering, Anantapuram, A. P, India. His areas of interest include Control Systems and Power Electronics. E-Mail id: jitendravikas@gmail.com

Prof. R. Kiranmayi completed B. Tech in Electrical & Electronics Engineering in 1993, M.Tech in Electrical Power Systems in 1995 & Ph. D in Electrical Engineering in 2013 from JNTUA College of Engineering, Ananthapuram. She is currently working as a Professor & HoD in EEE dept, JNTUA College of Engineering, Anantapuram, Andhra Pradesh, India. Her areas of interest include Power Systems, Power Electronics and Control Systems.

T. Manohar completed B.Tech in Electrical & Electronics Engineering in 2010 from Gates Institute of Technology, Gooty, Affiliated to JNTU Anantapur, Ananthapuramu and M.Tech in Control Systems in 2013 from JNTUA College of Engineering, Anantapuram. He is currently working as a Lecturer in EEE dept, JNTUA College of Engineering, Anantapuram, Andhra Pradesh, India. His areas of interest include Power Electronics and Control Systems.

©IJRASET: All Rights are Reserved

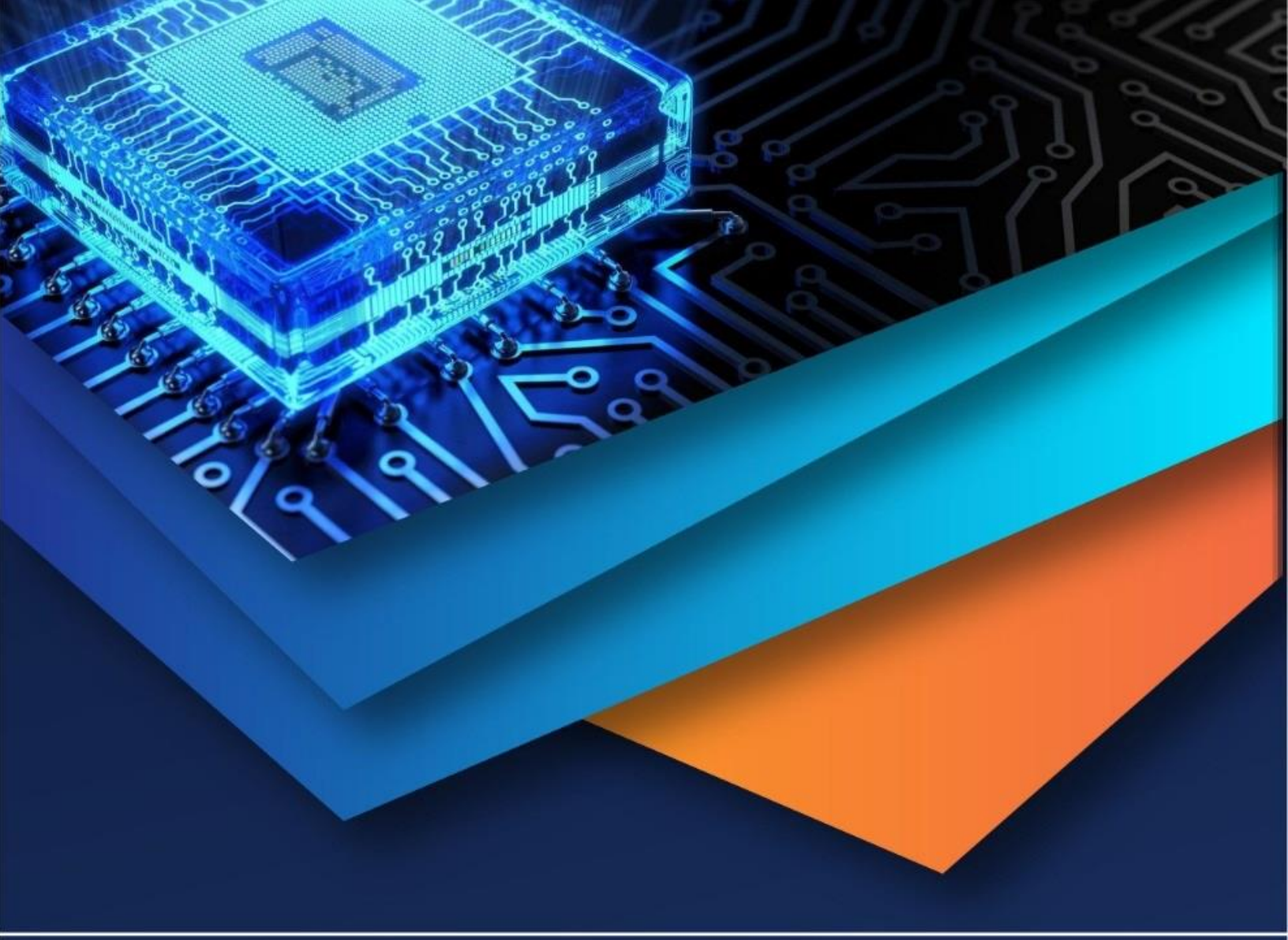

10.22214/IJRASET

45.98

IMPACT FACTOR: 7.129

IMPACT FACTOR: 7.429

INTERNATIONAL JOURNAL FOR RESEARCH

IN APPLIED SCIENCE & ENGINEERING TECHNOLOGY

Call : 08813907089 (24*7 Support on Whatsapp)