iJRASET
International Journal For Research in
Applied Science and Engineering Technology

INTERNATIONAL JOURNAL FOR RESEARCH

IN APPLIED SCIENCE & ENGINEERING TECHNOLOGY

Volume: 5 **Issue:** V **Month of publication:** May 2017

DOI:

www.ijraset.com

Call: 08813907089 | E-mail ID: ijraset@gmail.com

Volume 5 Issue V, May 2017
ISSN: 2321-9653
International Journal for Research in Applied Science & Engineering Technology (IJRASET)

Modelling and Simulation of Dc to Ac Converter for Renewable Energy Source Using Simulink

M. Sujith[1], J. Asha[2]
[1] Department of Electrical and Electronics Engineering, IFET College of Engineering, Villupuram
[2]Dean Placement, IFET College of Engineering, Villupuram

Abstract: This paper deals with modeling and simulation of DC-AC converter for Renewable Energy Source. DC from the solar cell is stepped up using a Boost converter. The output of the Boost converter is converted in to three-phase AC using three-phase bridge inverter. Simulation is done with normal load and additional load and the results are presented. The sag in voltage due to additional load is compensated by increasing the output voltage from the Boost converter. The system has advantages like reduced hardware and voltage regulation capability.
Index Terms—distributed generation, photovoltaic, inverter

I. INTRODUCTION

In 2004, United States consumed nearly 20 million barrels of petroleum per day with daily production averaged only 7 million barrels [1]. So US depend on foreign imports of fuel. With high price on gasoline and increased demands on clean energy, renewable energy based generation is more popular. Renewable energy includes solar energy, wind energy and fuel cells etc. These energy sources are renewable and utilization of these energy sources creates zero or little emissions. Also distributed generation (DG) systems using renewable energy increase the reliability. Now renewable energy systems are relatively expensive and hence the cost is higher than fossil fuel. So renewable energy sources captured a small share of the total energy market [2]. However, with the development of technology, the cost of renewable energy is decreasing steadily and it will become as or more cost effective than fossil fuel in the future Technology is the key to increase the market share of renewable energy power generation. For renewable energy systems, power electronics play a vital role. Sometime they are the most expensive part of the system. Reducing cost, increasing efficiency and improving reliability of power electronics and electric machines are the technical challenges facing wider implementation of renewable energy power generation [3].

II.RENEWABLE ENERGY SOURCES

Renewable energy sources derive their energy from existing flow of energy, from on-going natural processes such as sun, wind, flowing water and geothermal heat flows. The most feasible alternative energy sources include solar, fuel cell and wind.

A. Solar Power

Solar energy is a renewable resource, it cannot be depleted. The sun delivers constantly 1.36 KW of power per square meter to the earth. Naturally some of the power is absorbed by the atmosphere. The absorption is due to the presence of CO2, H2O and O2 in the atmosphere. Though the sun shines only for a limited amount of time, the potential value of the solar energy is enormous. So far, photovoltaic technology is the most popular solar power technology. PV cells are made of semiconductors that generate electricity by electromagnetic means when exposed to sunlight [5]. Many individual PV cells are combined in to modules sealed between layers of glass to protect the electrical circuit from the environment. One or more modules are formed together for a panel. Finally a number of panels consist of an array.

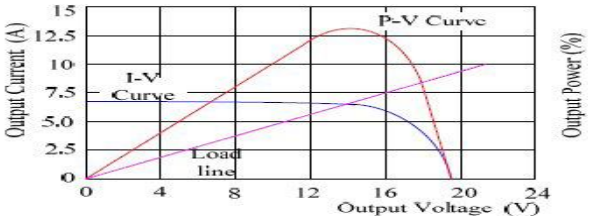

Figure 1. Typical V-I and P-V characteristics

©IJRASET: All Rights are Reserved

Volume 5 Issue V, May 2017
ISSN: 2321-9653

Fig. 1 shows that PV cells have nonlinear characteristics V-I characteristics. Its output voltage and power change according temperature and radiation. The intersection of the load line with the photovoltaic V-I characteristics is the operating point. In practice PV models are first cascaded then paralleled to form PV array, thus to meet the voltage and power requirement.

A. Fuel Cell

A fuel cell is a device that generates electricity by a chemical reaction. For fuel cell, hydrogen is the basic fuel. Hydrogen is produced from natural gas and renewable sources. Hydrogen is the most abundant element, the simplest chemical fuel that makes a highly efficient, clean burning energy carrier. Phosphoric acid fuel cells are commercially used to generate electricity in 200KW capacities. The fuel cells voltage and power is determined by two factors. First the rate at which hydrogen flows through the fuel cell [7]. Second the amount of current drawn by the inverter. Thus, by controlling the amount of current drawn by the inverter, the fuel cell voltage and power can be controlled [8]. Fig. 2 shows that the fuel polarization curve.

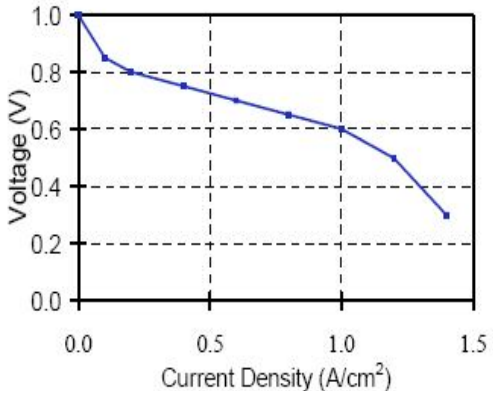

Figure 2. Fuel cell polarization curve

B. Wind Energy

Wind is intermittent resource and variable and unpredictable over even a day's time. Wind occurs as a direct result of differential solar heating of the atmosphere. The differences depend on altitude, land and sea, time of year, time of day etc. and when combined with the rotation of the earth and local geographical features produce an extremely complex distribution of wind strength and direction over both time and space.

The power in the wind is a function of its speed and air density. Density of air decreases with increasing temperature and increasing altitude. The most important factor for the amount of wind energy is the wind speed. The power curve of a wind is a graph that indicates how large the electrical power output will be for the turbine at different wind speeds.

The wind turbines use the kinetic energy of the wind and convert that energy in to mechanical energy, which in turn can be converted in to electricity by means of a generator. There are two types of wind turbines: the horizontal axis variety and the vertical axis design. The horizontal axis variety is currently the most practical.

In the past years, the amount of energy produced by wind driven turbines has increased hugely due to the growing technologies of turbine. Thus making wind power economically compatible with conventional sources of energy [6]. The above literature does not present simulink model of closed loop DC-AC converter system. The aim of this work is to develop a model for DC-AC converter.

III. BASICS OF PCS FOR RENEWABLE ENERGY SOURCES

A power conditioning system (PCS) or an inverter interface system is needed for almost all renewable energy sources to be used by loads or fed to the grid. For renewable energy sources, the output power and voltage depends on variety of uncontrollable factors. For example: radiation intensity determines the obtainable voltage and power of a solar panel; wind speed determines the voltage and power of a wind turbine; and the output voltage and power of fuel cells changes greatly with operating temperature and fuel and air flow rates. Further, the output voltage of PV and fuel cells also changes over a wide range of 2:1 with the loading current. However for renewable energy DG, the demanded output voltage of the system is constant and 50HZ AC regardless of the output voltage of the energy sources. All existing power conversion topologies used in today's PCS or utility interface can be boiled down to two basic circuits as shown in Fig. 3 a and Fig. 3 b .

©IJRASET: All Rights are Reserved

Volume 5 Issue V, May 2017
ISSN: 2321-9653
International Journal for Research in Applied Science & Engineering Technology (IJRASET)

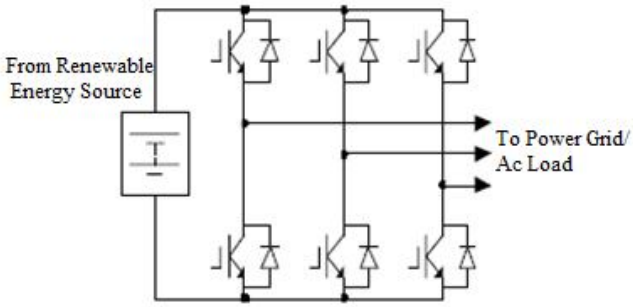

Figure 3.a Configuration using a single PWM Inverter

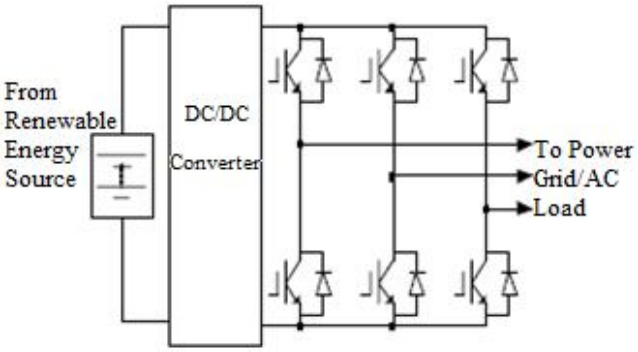

Figure 3.b Configuration using a DC/DC Converter and a PWM Inverter

The traditional voltage source PWM inverter is used in both figures 3a and 3b. The inverter is used to convert DC power to AC voltage required by the load and power grid. The DC power is from fuel cell, PV panel in solar power, or rectified turbine generator in wind power. The output voltage that the inverter can produce is always lower than the available DC voltage. This voltage buck nature of the traditional voltage-source inverter bears many drawbacks:

For DG systems, the required AC output voltage demands a minimum DC source voltage, thus more cells (solar or fuel cells) have to be stacked in series to provide the minimum DC voltage. The connection cost and the cost associated with HV installations are high[4].

A minimum DC voltage or DCDC voltage boost stage is needed and components have to be oversized and become less efficient. Many power sources, such as PV panels, fuel cells, wind turbine generators, have a wide voltage change range with load. The inverter has to be rated according to the maximum voltage and maximum current. For a required output power, the inverter thus has to be rated twice the output power to cope with the voltage change range of 1:2 In order to overcome the drawbacks of traditional voltage source inverter, a DC/DC boost converter is added to boost voltage as shown in figure 3 b. This configuration greatly reduces the requirements and costs of the energy source. This positively impacts the inverter current rating and hence cost of the whole system. However, there are still some disadvantages:

A. Because of two stage configurations, the power is processed through two stages: DC-DC boost stage and DC-AC inversion stage which reduces the power conversion efficiency.
B. As more components are used in this configuration reliability is reduced.
C. The boost stage increases system size/weight because of the additional heat sinks.

Hence both configurations have limitations which contribute high cost. New technologies to reduce the cost, size and increase the efficiency and reliability have been always the research topic of power electronics. In this paper, we look in to an inverter topology, DCAC converter and present its applications to power conditioning and utility interface for renewable energy sources.

IV. SIMULATION RESULTS

DC-AC converter using solar cell is shown in figure 4a. Output voltage of solar cell is shown in figure 4b. Its value is 23V. It is

©IJRASET: All Rights are Reserved

Volume 5 Issue V, May 2017
ISSN: 2321-9653

stepped up to 230V by using boost converter. The output of the boost converter is converted in to three phase AC using three phase inverter. The output contains three voltages displaced by 120 degree. The phase currents are shown in Figure 4e. Output power supply to the load is shown in Figure 4f. The variation of output voltage in duty cycle is given in table 1. The corresponding graphs are shown in figure 4g.DC-AC converter with additional load is shown in figure 5a. Output of boost converter is shown in

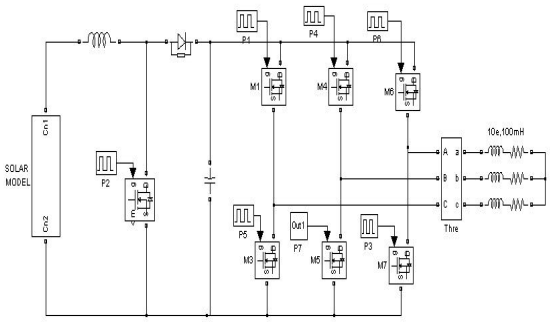

Figure 4.a.DC-AC converter using solar cell

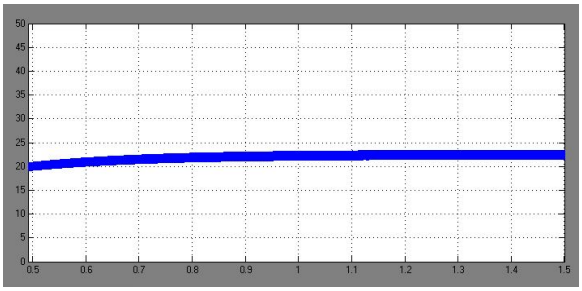

Figure 4.b. Output voltage of solar cell

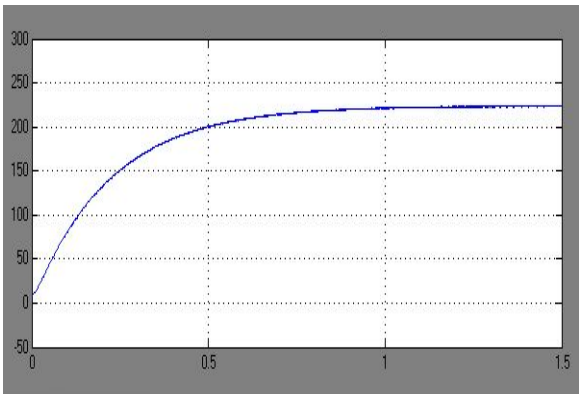

Figure 4.c. Output voltage of boost converter

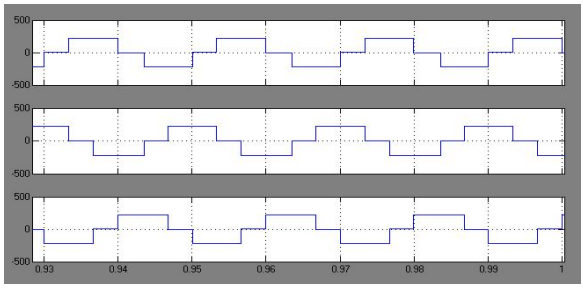

Figure 4.d.Output inverter phase voltage

©IJRASET: All Rights are Reserved

Volume 5 Issue V, May 2017
ISSN: 2321-9653
International Journal for Research in Applied Science & Engineering Technology (IJRASET)

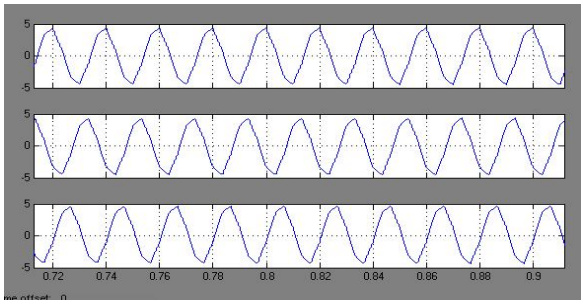

Figure 4.e. Output inverter phase current

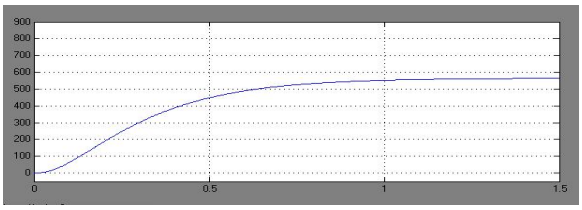

Fig4.f. Output power supply to the load

Duty cycle	Boost voltage	Po=V*I (W)	Po=V*I*C OSQs(W)
0.75	167	216	313
0.8	190	282	410
0.85	215	360	522
9.0	225	388	564

Table1.Variation of output voltage

DC-AC converter with hybrid generation source is shown in figure 5a. The voltage decreases due to the addition of extra load. Three phase line voltages are shown in B

Wind generator and rectifier system is added to the DC link to compensate the load voltage. The output of the converter is shown in figure 5b. The RMS Value of the inverter is shown in figure 5c.At t = 2Seconds, the output voltage decreases with addition of extra load. At t = 2.8Seconds, the voltage comes to the normal value due to the power supplied by the wind generator system. The same can be observed from the line voltages shown in Figure 5d.

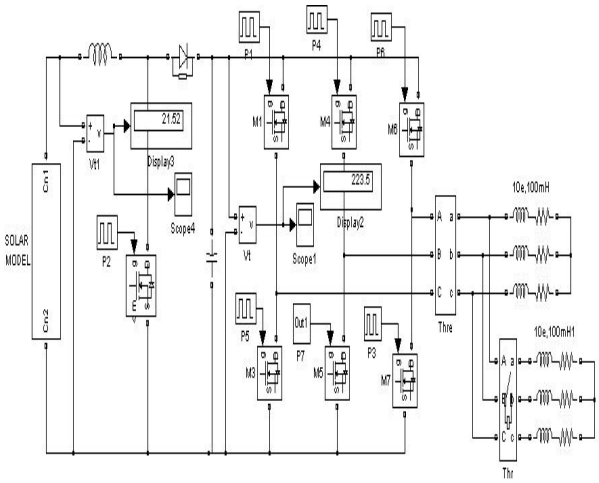

Figure 5.a.DC-AC converter with additional load

©IJRASET: All Rights are Reserved

Volume 5 Issue V, May 2017
ISSN: 2321-9653
International Journal for Research in Applied Science & Engineering Technology (IJRASET)

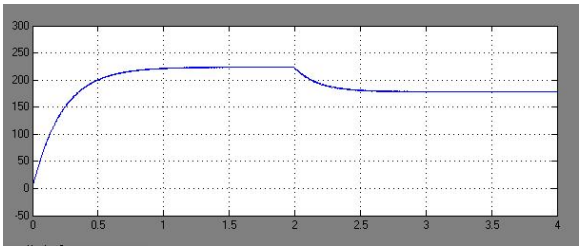

Figure 5.b.Output of boost converter

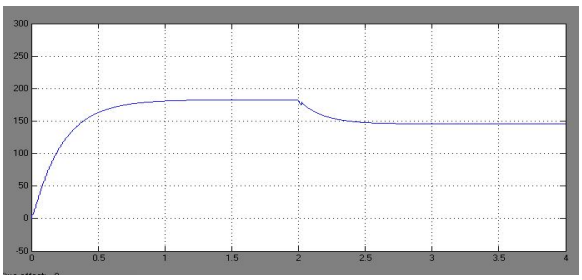

Figure 5.c.RMS value of inverter voltage

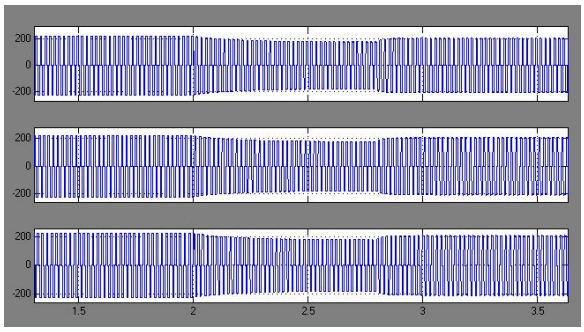

Figure 5.d.3-phase line voltage\

V. CONCLUSION

DC-AC converter with solar cells and hybrid generation system are modeled using mat lab simulink. These models are successfully used for simulation studies. The advantage of the boost converter at the input is that it has reduced hardware. The hybrid generation system is capable of maintaining constant voltage at the output. The simulation results with single source and dual source systems are presented. The simulation results are in line with the predictions.

REFERENCES

[1]. Frede Blaabjerg, Zhe hen,S.B.Kjaer, “Power electronics as efficiency interface in dispersed power generation systems” IEEE Trans.on Power Electronics.Oct 2004.
[2]. F.Z.Peng, “Z-Source Inverter”, IEEE Transactions on industry applications” APR 2003.
[3]. Miaosen Shen, Jin Wang, Alan Joseph,FangZ.Peng, Leon M Tolbert and Donald J Adams, “Maximum constant boost control of the Z-Source Inverter” in proc IEEE IAS’04
[4]. Y.Hung; M.Shen; F.Z.Peng; J.Wang “A Z-Source Inverter for residential Photovoltaic systems” IEEE Trans on Power Electronics .Nov 2006.
[5]. Shen.M, Joseph.A,Wang.J,Peng.F.Z, Adams.D.J “Comparison of traditional inverers and Z-Source Inverter”. IEEE Power Electronics specialist conference.Jun’05
[6]. Kent Holland, Miaosen Shen, F.Z.Peng “Z-Source Inverter control for traction drive of fuel cell-battery hybrid vehicles” IEEE Industry Applications Conference Oct 2005
[7]. www.eia.doe.gov/neic/brochure/infocard01 htm
[8]. Renewable energy sources, http://iamest.jrc.it

©IJRASET: All Rights are Reserved

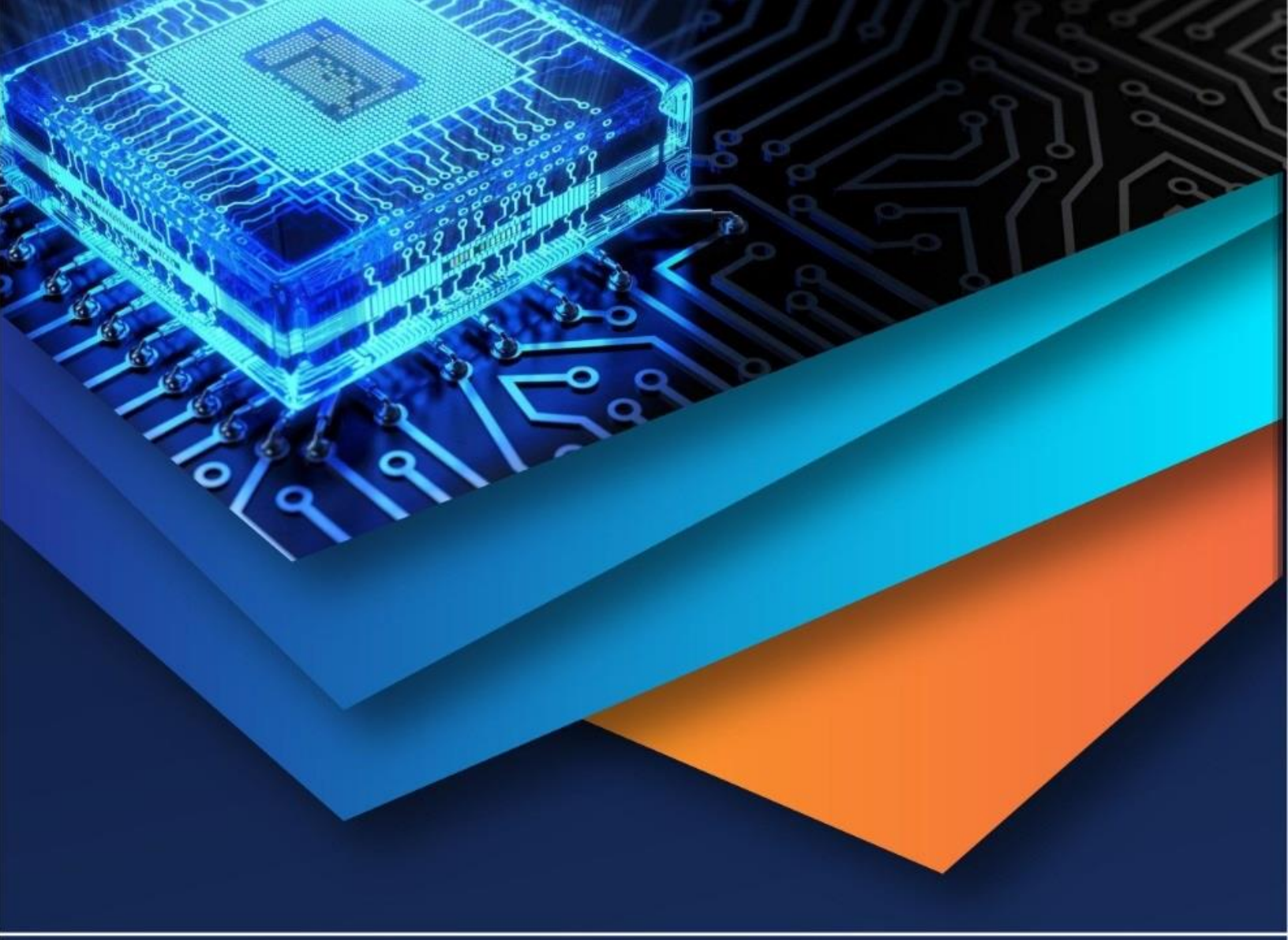

10.22214/IJRASET

45.98

IMPACT FACTOR: 7.129

IMPACT FACTOR: 7.429

INTERNATIONAL JOURNAL FOR RESEARCH

IN APPLIED SCIENCE & ENGINEERING TECHNOLOGY

Call : 08813907089 (24*7 Support on Whatsapp)