iJRASET
International Journal For Research in
Applied Science and Engineering Technology

INTERNATIONAL JOURNAL FOR RESEARCH

IN APPLIED SCIENCE & ENGINEERING TECHNOLOGY

Volume: 5 **Issue:** VI **Month of publication:** June 2017

DOI:

www.ijraset.com

Call: 08813907089 | E-mail ID: ijraset@gmail.com

Volume 5 Issue VI, June 2017
ISSN: 2321-9653
International Journal for Research in Applied Science & Engineering Technology (IJRASET)

Wind Pressure Distribution on Triangular Shape of Building Model

Prof. D. K. Mokashi[1], U. S Patil[2], Vashistha Kamble[3], Akshay Mande[4]
[1]*Asst. Professor, Department of Civil Engineering, Bharati Vidyapeeth's College of Engineering Lavale Pune*
[2]*Asst. Professor, Department of Civil Engineering, Bharati Vidyapeeth's College of Engineering Lavale Pune*
[3] *Research students, Department of Civil Engineering, Bharati Vidyapeeth's College of Engineering Lavale Pune*
[4] *Research students, Department of Civil Engineering, Bharati Vidyapeeth's College of Engineering Lavale Pune*

***Abstract**: in present scenario due to rapid growth of population and requirement of land is inadequate there is need of tall buildings. Proposed study is of wind pressure profile on triangular shape of building model. The purpose of this study is to understand effect of aerodynamic characteristics on triangular shape of tall building model. This paper concerned with pressure measurement studies on triangular shape building model with geometric scale 1:300 and of plan size 15cm x15cm and height 15 cm. The models are tested in an open circuit boundary layer wind tunnel. Pressure profile changes due to angle made in 0^0,60^0 and $90^0$and effect of distance between object building and interfering building on wind loads is studied.*
Keywords: triangular building model, open circuit wind tunnel, orientation, pressure profile.

I. INTRODUCTION

Wind is important factor while designing of tall building. Today's increasing population and deficiency space that why need of vertical construction, mainly tall building with various shapes. As height of building increases then effects of wind increases. When action of wind causes excessive levels of pressure and these create discomfort to occupants and structures. In this present study pressure measurement is carried out triangular building model with geometric scale 1:300 of plan size 15 cm x 15cm and height 15 cm. placed in wind tunnel with central axis 0^0,60^0 and 90^0. Reading are recorded and pressure profile created as per angle. This study was conducted in Bharati Vidyapeeth's College Of Engineering Lavale Pune.

II. MATERIAL AND METHOD

A. Model Description

Triangular model made by 8mm thick plywood equal side of 15 cm x 15 cm in plan and height is 15cm. Scale of model is 1:300 i.e. 1 cm =3 m. on the surface of model pressure measurement points are made 2.5 mm diameter with 1.5 cm staggered spacing on both side. Seventy pressure points are on the surface model shown in fig.

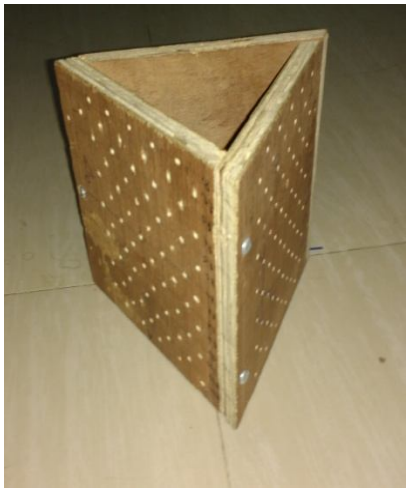

Fig: 1 Model

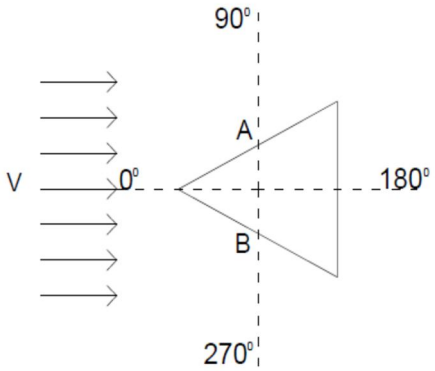

Fig: 2 Wind directions with 0^0

©IJRASET: All Rights are Reserved

Volume 5 Issue VI, June 2017
ISSN: 2321-9653

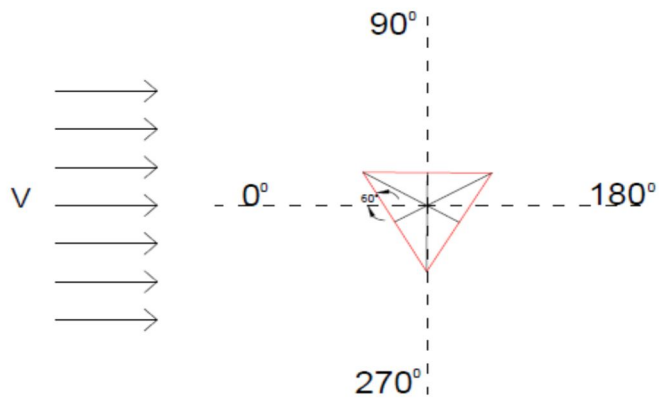

Fig: 3 Wind directions with 60^0

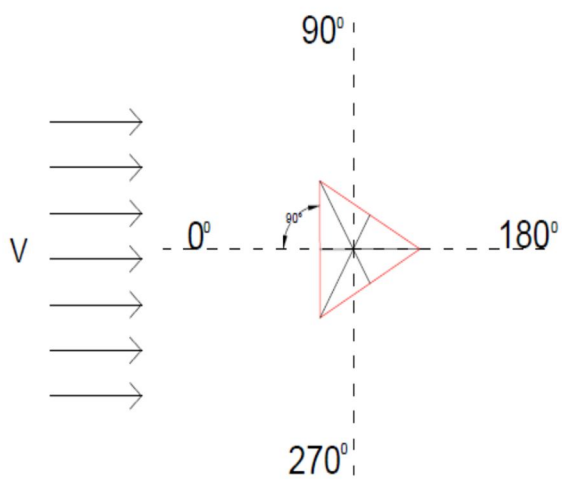

Fig: 4 Wind directions with 90^0

1) *Flow Characteristics:* In this study open circuit wind tunnel in which model are tested in test section and closing while recording reading. Velocity is checked with the help of anemometer. Three different velocities such as 10 m/s, 15 m/s and 20 m/s are taken and manometer readings are recorded.
2) *Measurement technique:* Triangular shape building model placed at center of wind tunnel test section under the free stream wind velocity of 10 m/s, 15m/s and 20 m/s. Reading set are recorded in such way that angle made as shown in figure. One end of manometer tube connected to model and other end connected to manometer display board.

Pressure conversation: mm of water column into pressure following formulae are used $Pa = \rho g h$ unit is N/Sq.m i.e.(Pa)

Where,

Pa – Pressure in Pascal

ρ - Density of water 1000 kg/m^3

g- Acceleration due to gravity m/s^2

h - Height of water column in m.

©IJRASET: All Rights Reserved

Volume 5 Issue VI, June 2017
ISSN: 2321-9653

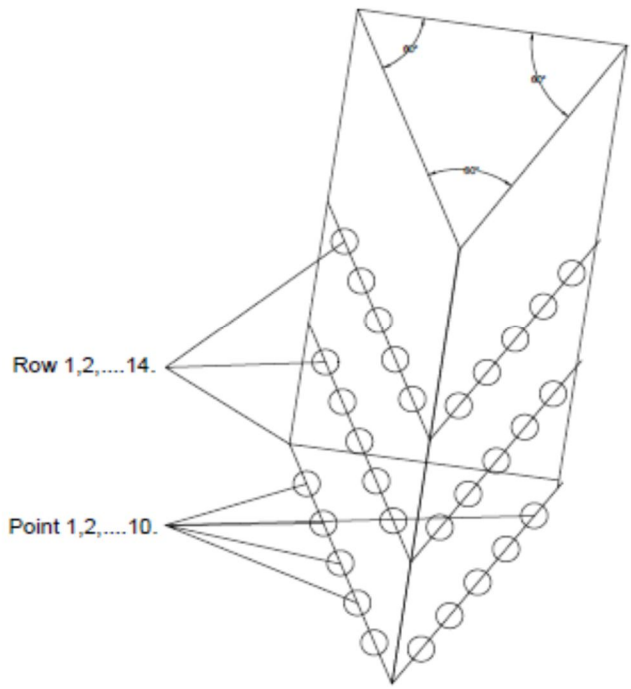

Fig: 5 Pressure point and row

TRIANGULAR BUILDING MODEL MANOMETER READING
FACE A & B (0^0 Deg) (TABLE NO 1)

S.No	Point	Co-Ordinate Row 1		Manometer Reading (mm)			Co-Ordinate Row 2		Manometer Reading (mm)		
		cm	cm	Velocity m/s			cm	cm	Velocity m/s		
				V1	V2	V3			V1	V2	V3
		X	Y	10	15	20	X	Y	10	15	20
1	P1	3.5	1	1	11	1	4.5	2	1	12	1
2	P2	5.5	1	5	9	5	6.5	2	4	10	6
3	P3	7.5	1	7	11	10	8.5	2	6	11	10
4	P4	9.5	1	8	13	2	10.5	2	8	12	0
5	P5	11.5	1	-4	-5	-10	12.5	2	-5	-7	-12
6	P6	19	1	7	12	14	17.5	2	7	10	12
7	P7	21	1	7	12	17	19.5	2	6	11	14
8	P8	23	1	4	4	5	21.5	2	3	3	5
9	P9	25	1	4	5	12	23.5	2	3	4	10
10	P10	27	1	5	4	4	25.5	2	5	3	3

©IJRASET: All Rights are Reserved

Volume 5 Issue VI, June 2017
ISSN: 2321-9653
International Journal for Research in Applied Science & Engineering Technology (IJRASET)

TRIANGULAR BUILDING MODEL MANOMETER READING
FACE A & B (0^0 Deg) (TABLE NO 2)

S.No	Point	Co-Ordinate Row 3		Manometer Reading (mm)			Co-Ordinate Row 4		Manometer Reading (mm)		
		cm	cm	Velocity m/s			cm	cm	Velocity m/s		
				V1	V2	V3			V1	V2	V3
		X	Y	10	15	20	X	Y	10	15	20
1	P1	3.5	3	1	12	1	4.5	4	1	13	1
2	P2	5.5	3	3	13	6	6.5	4	4	12	8
3	P3	7.5	3	5	15	10	8.5	4	4	15	10
4	P4	9.5	3	7	11	-3	10.5	4	6	11	-5
5	P5	11.5	3	-8	-10	-15	12.5	4	-10	-10	-16
6	P6	19	3	8	10	-6	17.5	4	8	8	-7
7	P7	21	3	5	10	13	19.5	4	5	7	14
8	P8	23	3	4	3	5	21.5	4	4	2	5
9	P9	25	3	2	3	10	23.5	4	1	3	10
10	P10	27	3	3	5	3	25.5	4	3	4	2

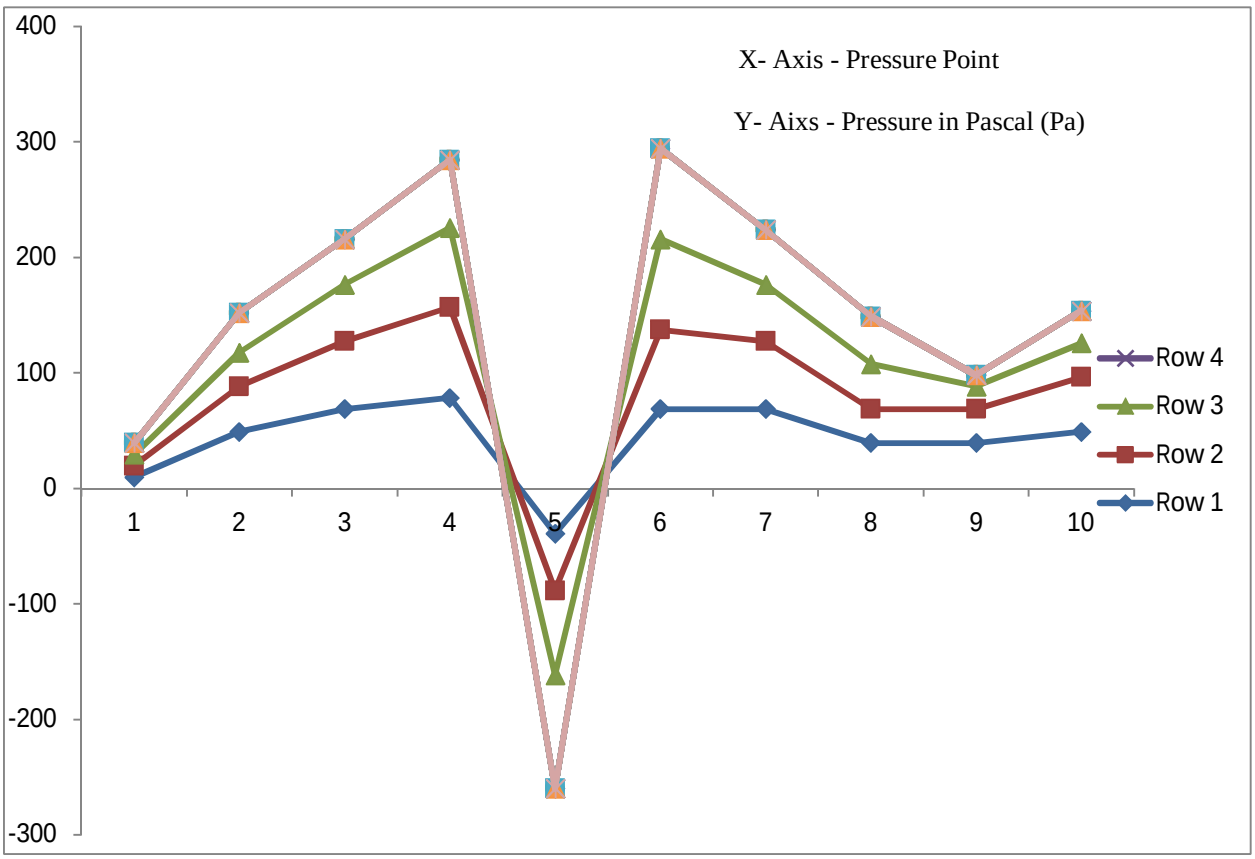

Fig: 6 Pressure profile of 0^0 inclinations (Velocity 10 m/s)

©IJRASET: All Rights are Reserved

Volume 5 Issue VI, June 2017
ISSN: 2321-9653
International Journal for Research in Applied Science & Engineering Technology (IJRASET)

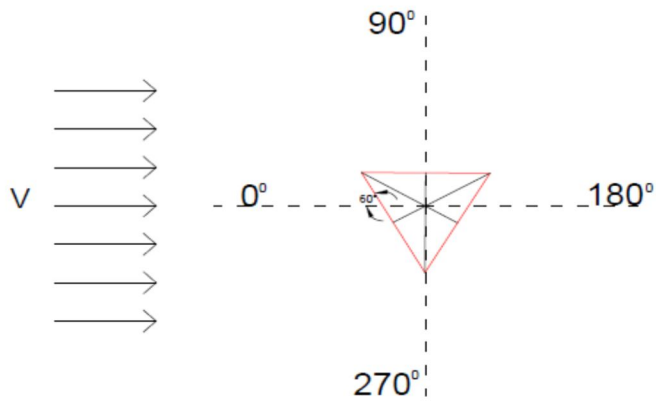

Fig: 7 Wind directions with 60^0

TRIANGULAR BUILDING MODEL MANOMETER READING
FACE A & B (60^0 Deg) (TABLE NO 3)

S.No	Point	Co-Ordinate Row 1		Manometer Reading (mm)			Co-Ordinate Row 2		Manometer Reading (mm)		
		cm	cm	Velocity m/s			cm	cm	Velocity m/s		
				V1	V2	V3			V1	V2	V3
		X	Y	10	15	20	X	Y	10	15	20
1	P1	3.5	1	2	6	1	4.5	2	2	9	6
2	P2	5.5	1	1	9	2	6.5	2	-1	-2	-5
3	P3	7.5	1	-2	12	-2	8.5	2	9	-7	2
4	P4	9.5	1	5	13	-3	10.5	2	5	4	11
5	P5	11.5	1	4	14	17	12.5	2	8	18	12
6	P6	19	1	5	15	15	17.5	2	4	15	16
7	P7	21	1	15	8	11	19.5	2	7	11	18
8	P8	23	1	12	9	9	21.5	2	6	5	8
9	P9	25	1	14	7	5	23.5	2	2	8	4
10	P10	27	1	8	3	2	25.5	2	2	9	2

TRIANGULAR BUILDING MODEL MANOMETER READING
FACE A & B (60^0 Deg) (TABLE NO 4)

S.No	Point	Co-Ordinate Row 3		Manometer Reading (mm)			Co-Ordinate Row 4		Manometer Reading (mm)		
		cm	cm	Velocity m/s			cm	cm	Velocity m/s		
				V1	V2	V3			V1	V2	V3
		X	Y	10	15	20	X	Y	10	15	20
1	P1	3.5	3	2	6	8	4.5	4	2	1	6
2	P2	5.5	3	1	-4	-4	6.5	4	3	-2	3
3	P3	7.5	3	-2	2	6	8.5	4	9	9	-7

©IJRASET: All Rights are Reserved

Volume 5 Issue VI, June 2017
ISSN: 2321-9653

4	P4	9.5	3	3	10	18	10.5	4	10	8	5
5	P5	11.5	3	15	18	14	12.5	4	11	16	15
6	P6	19	3	11	17	15	17.5	4	15	14	14
7	P7	21	3	6	15	14	19.5	4	18	15	18
8	P8	23	3	7	9	4	21.5	4	9	12	9
9	P9	25	3	7	8	4	23.5	4	7	14	8
10	P10	27	3	6	4	6	25.5	4	3	7	5

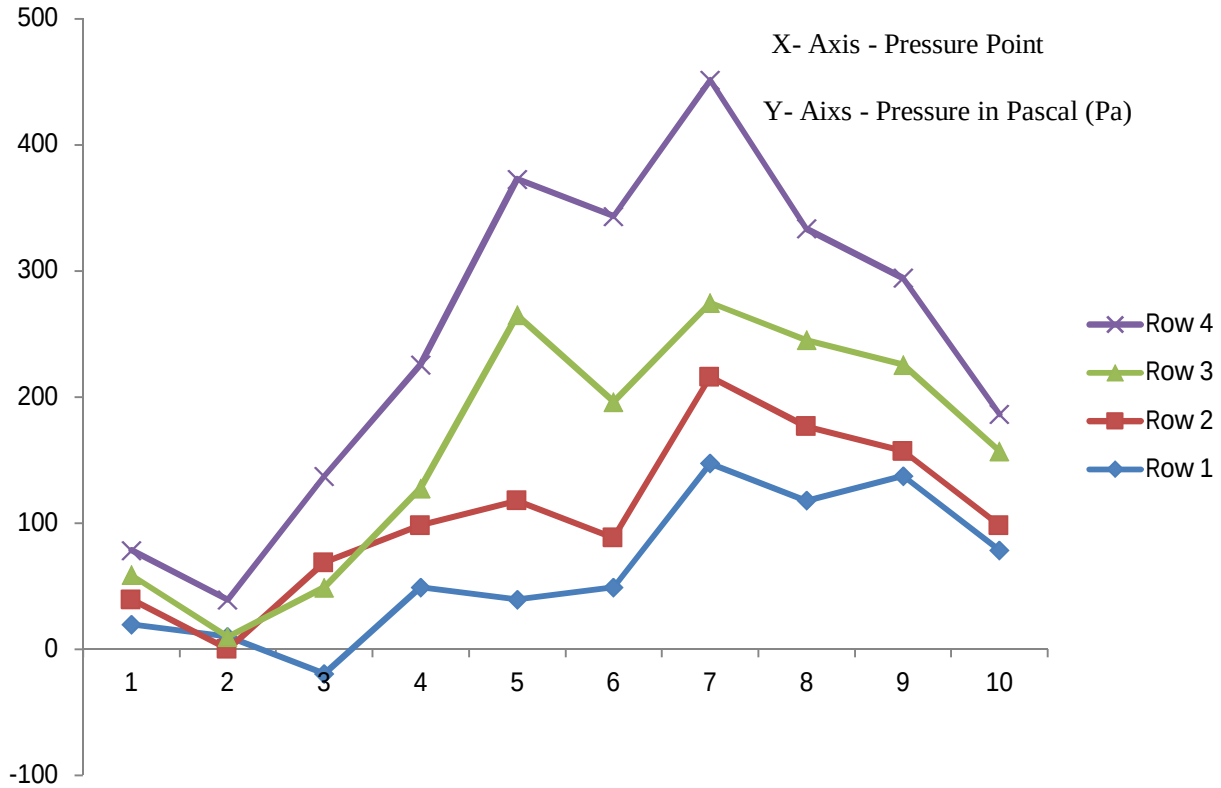

Fig: 8 Pressure profile of 60^0 inclination (with velocity 10 m/s)

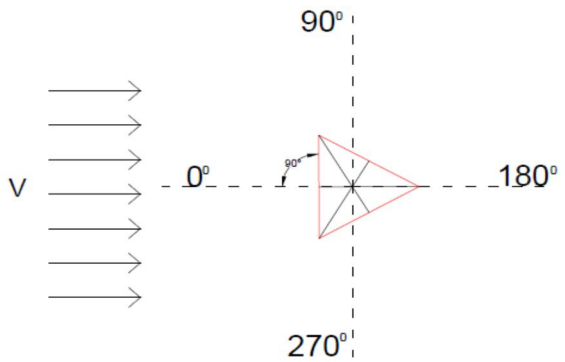

Fig: 9 Wind directions with 90^0

©IJRASET: All Rights are Reserved

Volume 5 Issue VI, June 2017
ISSN: 2321-9653
International Journal for Research in Applied Science & Engineering Technology (IJRASET)

TRIANGULAR BUILDING MODEL MANOMETER READING

FACE A & B (90^0 Deg) (TABLE NO 5)

S.No	Point	Co-Ordinate Row 1		Manometer Reading (mm)			Co-Ordinate Row 2		Manometer Reading (mm)		
		cm	cm	Velocity m/s			cm	cm	Velocity m/s		
				V1	V2	V3			V1	V2	V3
		X	Y	10	15	20	X	Y	10	15	20
1	P1	3.5	1	2	13	2	4.5	2	2	15	2
2	P2	5.5	1	6	9	6	6.5	2	7	11	8
3	P3	7.5	1	8	12	12	8.5	2	8	14	13
4	P4	9.5	1	9	17	2	10.5	2	9	18	0
5	P5	11.5	1	-3	-7	-10	12.5	2	-5	-11	-14
6	P6	19	1	8	14	14	17.5	2	8	14	13
7	P7	21	1	9	12	17	19.5	2	9	12	17
8	P8	23	1	3	5	5	21.5	2	3	5	5
9	P9	25	1	5	6	12	23.5	2	5	6	12
10	P10	27	1	5	4	4	25.5	2	5	4	4

.

TRIANGULAR BUILDING MODEL MANOMETER READING

FACE A & B (90^0 Deg) (TABLE NO 6)

S.No	Point	Co-Ordinate Row 3		Manometer Reading (mm)			Co-Ordinate Row 4		Manometer Reading (mm)		
		cm	cm	Velocity m/s			cm	cm	Velocity m/s		
				V1	V2	V3			V1	V2	V3
		X	Y	10	15	20	X	Y	10	15	20
1	P1	3.5	3	2	17	2	4.5	4	3	19	2
2	P2	5.5	3	7	13	9	6.5	4	8	15	11
3	P3	7.5	3	8	15	14	8.5	4	9	17	15
4	P4	9.5	3	9	19	-2	10.5	4	9	20	-4
5	P5	11.5	3	-7	-14	-18	12.5	4	-10	-18	-22
6	P6	19	3	8	13	12	17.5	4	8	13	11
7	P7	21	3	9	12	18	19.5	4	9	12	18
8	P8	23	3	3	5	5	21.5	4	3	5	5
9	P9	25	3	5	5	13	23.5	4	5	5	13
10	P10	27	3	4	4	4	25.5	4	4	4	4

©IJRASET: All Rights are Reserved

Volume 5 Issue VI, June 2017
ISSN: 2321-9653
International Journal for Research in Applied Science & Engineering Technology (IJRASET)

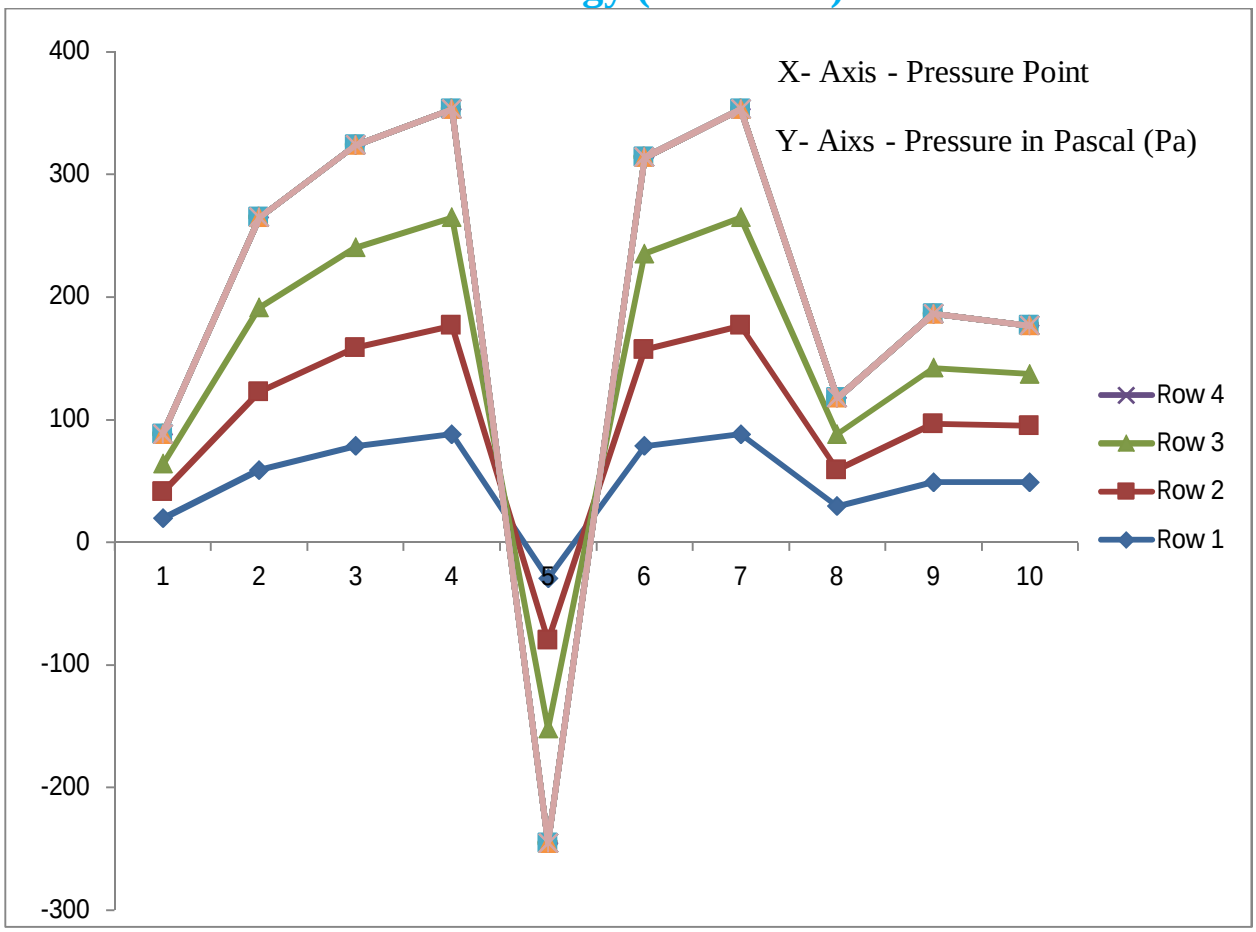

Fig: 10 Pressure profile with inclination 90^0 (Velocity 10 m/s)

According to wind direction and orientation of building model pressure distribution as shown in above figure. In case of 60^0 angle maximum pressure acted.

III. CONCLUSTION

A. Maximum pressure acted when skew formation along the direction of wind.

B. In case of 60^0 angle maximum wind pressure acted and which create maximum twisting moment on the structure

C. Pressure distribution spread over large area in 0^0 as compare to 60^0 and 90^0

REFERENCES

[1] Balendra, T. and Nathan, G.K., "Dynamic Response of a Triangular Building Model in an Atmospheric Boundary Layer", Journal of Wind 2.Engineering and Industrial Aerodynamics, Vol. 31, pp. 29-39, 1988

[2] J. A. Amin and A. K. Ahuja "Experimental study of wind-induced pressures on buildings of various geometries" Journal of engineering, science and technology Vol. 3, No. 5, 2011, pp. 1-19.

[3] Prof. Sarita Singla, Taranjeet Kaur, Megha Kalra and Sanket Sharma "Behaviour of R.C.C. tall buildings having different shapes subjected to wind load" Journal on civil and environmental engineering 02, 2012, 3-17.

[4] HosseinMoravej,"Wind load analysis of buildings in hill-shape zone"Int. Journal of Applied Sciences and Engineering Research, Vol. 4, Issue 1,vResearch article ISSN 2277 – 9442.

[5] Ashok K. Ahuja, "wind loads on Triangular shape tall building"International Journal of Engineering and Applied Sciences (IJEAS)ISSN: 2394-3661, Volume-2, Issue-5, May 2015.

©IJRASET: All Rights are Reserved

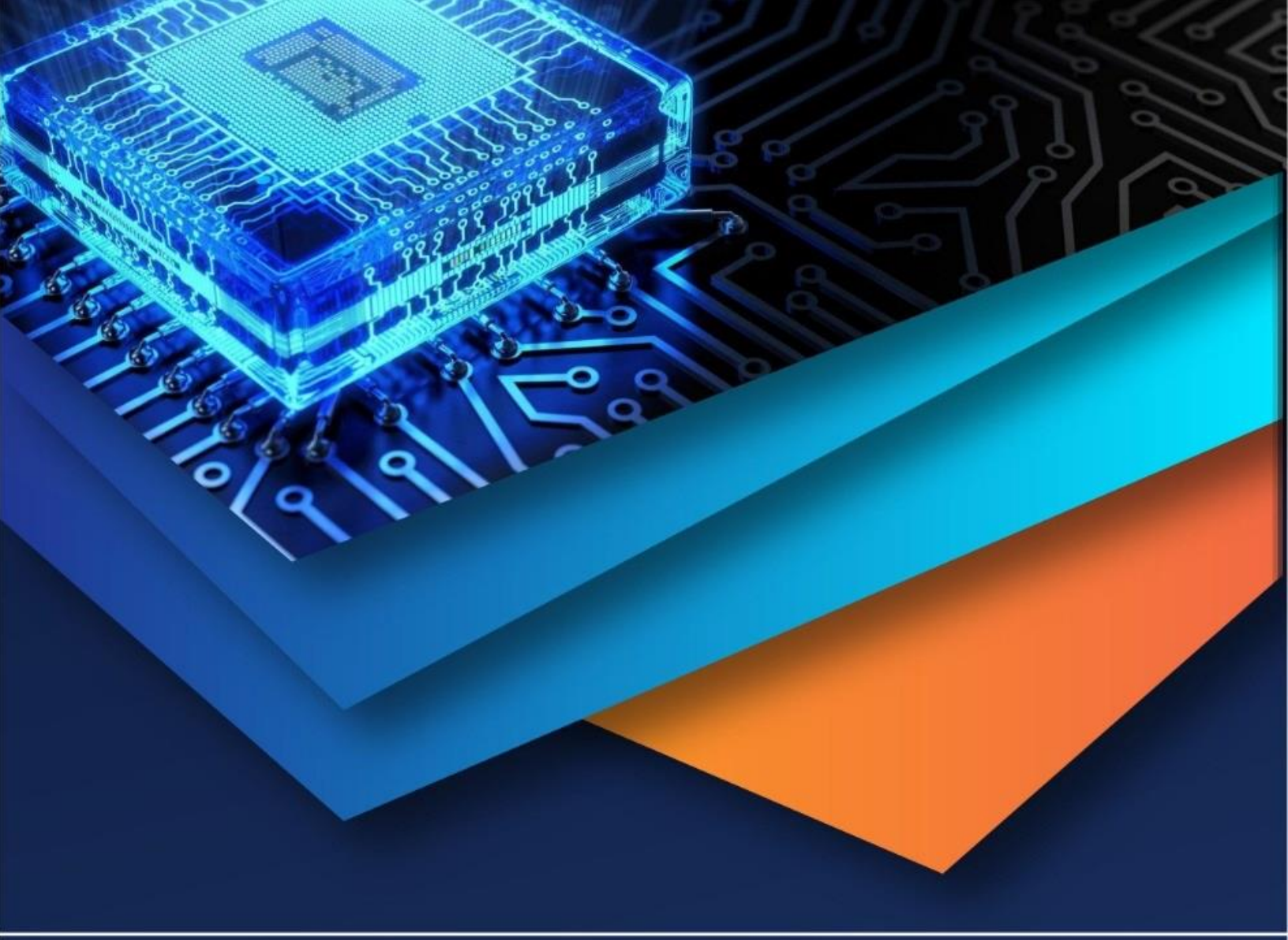

10.22214/IJRASET

45.98

IMPACT FACTOR: 7.129

IMPACT FACTOR: 7.429

INTERNATIONAL JOURNAL FOR RESEARCH

IN APPLIED SCIENCE & ENGINEERING TECHNOLOGY

Call : 08813907089 (24*7 Support on Whatsapp)