iJRASET
International Journal For Research in
Applied Science and Engineering Technology

INTERNATIONAL JOURNAL FOR RESEARCH

IN APPLIED SCIENCE & ENGINEERING TECHNOLOGY

Volume: 5 **Issue:** VII **Month of publication:** July 2017

DOI:

www.ijraset.com

Call: 08813907089 | E-mail ID: ijraset@gmail.com

International Journal for Research in Applied Science & Engineering Technology (IJRASET)
ISSN: 2321-9653; IC Value: 45.98; SJ Impact Factor:6.887
Volume 5 Issue VII, July 2017- Available at www.ijraset.com

Shared Energy Storage for Household Energy Management

Sayali R. Tirpude[1] , Dr. Harikumar Naidu[2] , Prof. Shradha Gajbhiye[3]
[1]PG Student, [2]HOD, [3]Assistant Professor , Dept of Electrical Engg TGPCE, Nagpur

Abstract: The development of any country depends upon a large extent on availability and usage of electricity. The control of industrial equipment's normally is done by manual operation. It is overcome by a new mode of communication which is used to control all those equipment's through load sharing mechanism by a single message from anywhere. The main aim of this paper is to protect the damage of transformers due to overload on it and to share these with another backup supply using IOT technology. The purpose of this paper is to provide a secured environment for the transformers from overloads which are distributing power to a certain regions by sharing these overloads with another parallel supply and also we monitor it is on IoT (Internet of things) web portal with location.
Keywords: Step-down transformer, ARM 7, Filter & Regulator, Relay.

I. INTRODUCTION

Nowadays, in Industrial applications most of the appliances operate on three phase supply. This paper is about developing a system that can support one of the other slave transformer supplies with the help of existing main transformer. The project basically consists of Arm7 LPC 2148 which generate pulses at its output. ARM7 has inbuilt flash EPROM. LPC 2148 Microcontroller Based Energy saver with RTC which uses LPC2148 microcontroller as its brain. Data stored remains in the memory even after power failure, as the memory ensures reading of the latest saved settings by the micro controller. Port 0 and Port 1 is used for generating six pulse output. This controller continuously checks for live condition of both main as well as slave transformers connected to it. In this project, we are using two transformers for sharing of power upon exceeding the loads. These two transformers are connected with the relay which is controlled by the embedded controller. Through the microcontroller, we are controlling this sharing of power with the help of relay. The relays will trips to another transformer upon exceeding the limit of load. The ADC is an analog to digital converter which converts the values of analog current value to the digital value. This information is passed to the controller and then the controller checks the instruction and forwards it to the GSM modem. The modem immediately sends that particular SMS to the mobiles for which it is assigned and this will be displayed as load status on the LCD display. This relay is driven with a transistor. Contrast control preset is given for LCD contrast control. 7805 three terminal voltage regulator is used for voltage regulation. Bridge type full wave rectifier is used to rectify the ac output of secondary of 230/12V step down transformer. The mains power supply phase is stepped down by transformer to deliver 12V, 500 mA , which is rectified by diode and filtered by capacitor to produce the operating voltage for the operational amplifier. The voltage at inverting pin of operational amplifier is taken from the voltage divider circuit.

II. METHODOLOGY

During the design of the automatic load shared transformers a lot of considerations, conditions which at the end give rise to design.

A. Board Technical Specifications

Processor	: LPC2148
Real time Clock	: DS1307 on i2c Bus /w Battery
Data Memory	: 24LCxx on i2c Bus
LCD	: 16x2 Backlight
LED indicators	: Power
RS-232	: +9V -9V levels
Power	: 7-15V AC/DC , 500 mA
Voltage Regulator	: 5V Onboard LM7805

©IJRASET (UGC Approved Journal): All Rights are Reserved

III. BLOCK DIAGRAM

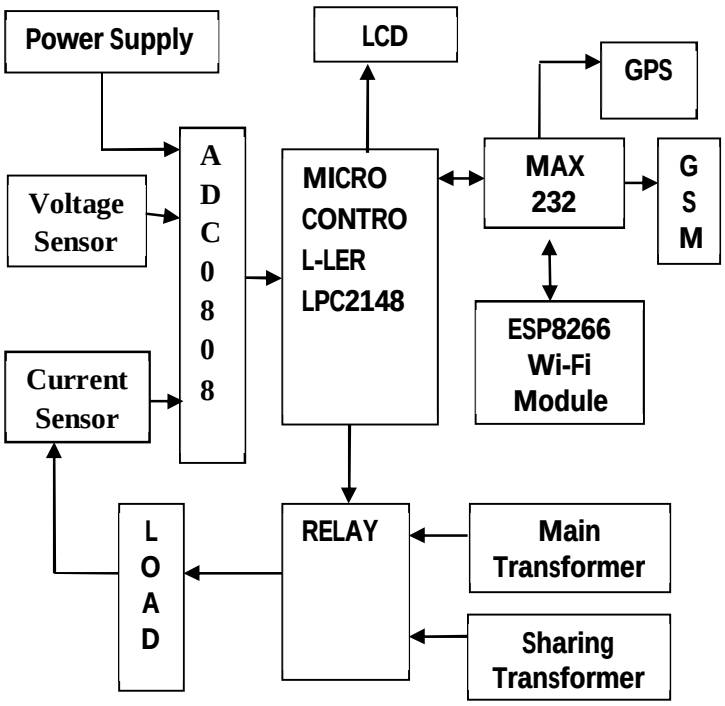

In this project uses regulated 12V, 500mA power supply. The 7805 three terminal voltage regulator is used for voltage regulation. Bridge type full wave rectifier is used to rectify the ac output of secondary of 230/12V step down transformer.

A. LPC2148 Controller

The ARM7TDMI- CPU is a general purpose 32 bit microprocessor, which offers high performance and very low power consumption. The ARM architecture based on Reduced Instruction Set Computer (RISC) principles. This simplicity results in a high instructions throughout and impressive real time interrupt response from a small and cost effective processor core. The LPC2148 SRM is designed to accessed as a byte – addressed memory. The data is only written to SRAM when software does another write.

1) *Power-Supply:* Requirement of power supply is the main task, power supply of +5V and +12V is required for the circuit. The supply of +12V needed for the Relay connections and 7805 regulator IC which has given +5V to the circuit. Power supply is generated after rectifying the step downed AC which again passes through filter capacitor & ripple eliminator circuits.

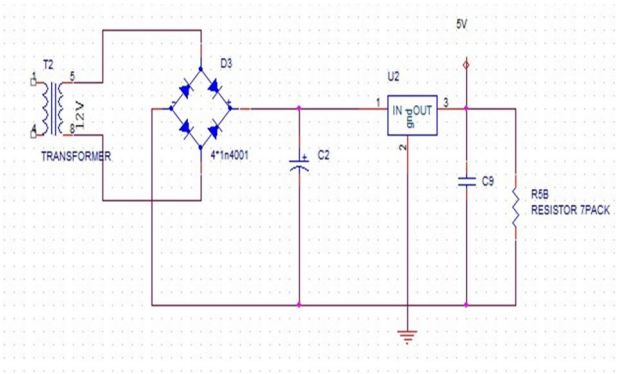

As the step down transformer is used for providing the supply to the input channel through the variac (Dimmer stat) or AC Mains, Variac of rating 230V AC can be used to control and vary the voltage level as per the requirement.

©IJRASET (UGC Approved Journal): All Rights are Reserved

B. Internet of Things (IoT)

The Internet of Things (IoT) is a system of interrelated computing devices, machines, objects, animals or people that are provided with unique identifiers and the ability of transfer data over a network without requiring human-to-human or human-to-computer interaction. In this paper WiFi module ESP8266EX is a set of high performance, high integration wireless SOCs, designed for space and power constrained mobile platform designers. It provides unsurpassed ability to embed Wi-Fi capabilities within other systems, or to function as a standalone application, with the lowest cost, and minimal space requirement.

1) *GSM:* GSM (Global System for Mobile communications) is the technology that underpins most of the world's mobile phone networks. The GSM platform is a hugely successful wireless technology and an unprecedented story of global achievement and cooperation. GSM has become the world's fastest growing communications technology of all time and the leading global mobile standard, spanning 218 countries. GSM is an open, digital cellular technology used for transmitting load data services. GSM operates allowing the transmission of basic data services such as SMS.
2) *Display:* Use of 2x16 LCD Display, which has normally shows scrolling text. By using left justifying the higher four data bits are used for displaying the data, and Enable and RS pins are used for operating the LCD display. The R/W pin connected to ground because it is only used for busy check and that precision checked out by giving suitable delays. Pin1 is connected to the ground, pin 2 is connected to +5v and pin 3 is connected to the trim pot through resistor to improve the readability of the LCD and varies with the brightness of the surrounding.

IV. ADVANTAGES

A. Highly sensitive.
B. Complete elimination of manpower.
C. System can be monitored and controlled from anywhere.
D. Mobile number can be changed at anytime.
E. Transformer status will not be lost in power failure conditions.

V. APPLICATIONS

A. Medical Systems
B. Industrial application
C. Electrical Substations
D. Power grids
E. Process Industries

VI. CONCLUSION

The implementation of the design concept were done by carrying out various tests achieved its design and construction is validated. The system worked according to specification by monitoring overloads and over-current. Imphmentation of this paper which will avoid failure of transformers from overloads by converting these overloads to other section of transformer. In addition the transformer can constantly distribute power to the required regions by changing over to the active energy supply. This automatic electronic system operates without human intervention hence the sluggishness of manual operation is eliminated and demand will be met without interruption .

REFERENCES

[1] G.Wood and M. New bourough, “Dynamic energy – consumption indicators for domestic appliances: environment behavior and design,” Energy Buildings , vol 35,pp. 821-8412003.
[2] M. Pipattanasomporn, H. Feroze, and S. Rahman, “Multi-agent systems in a distributed smart grid: Design and implementation,” in Proc.IEEE/PES Power Syst. Conf. Expo. (PSCE ’09), 2009, pp. 1–8.
[3] B. Daryanian, R. E. Bohn, and R. D. Tabors, “Optimal demand-side response to electricity spot prices for storage-type customers,” IEEE Trans. Power Syst., vol. 4, pp. 897–903, 1989.
[4] B. Daryanian, R. E. Bohn, and R. D. Tabors, “An experiment in real time pricing for control of electric thermal storage systems,” IEEE Trans. Power Syst., vol. 6, pp. 1356–1365, 1991.
[5] R. Bianchini and R. Rajamony, “Power and energy management for server systems,” Computer, vol. 37, pp. 68–76, 2004.
[6] R. A. Verzijlbergh, M. D. Ilic, and Z. Lukszo, “The role of electric vehicles on a green island,” in Proc. North Amer. Power Symp. (NAPS),2011, pp. 1–7

©IJRASET (UGC Approved Journal): All Rights are Reserved

[7] Z. Peng et al., "A methodology for optimization of power systems demand due to electric vehicle charging load," IEEE Trans. Power Syst .vol. 27, pp. 1628–1636, 2012.
[8] Q. Kejun et al., "Modeling of load demand due to ev battery charging in distribution systems," IEEE Trans. Power Syst., vol. 26, pp. 802–810,2011.
[9] N. J. Cutler et al., "High penetration wind generation impacts on spot prices in the Australian national electricity market," Energy Policy, vol. 39, pp. 5939–5949, 2011
[10] F. Li and D. L. Tolley, "Long-run incremental cost pricing based on unused capacity," IEEE Trans. Power Syst., vol. 22, pp. 1683–1689,2007

©IJRASET (UGC Approved Journal): All Rights are Reserved

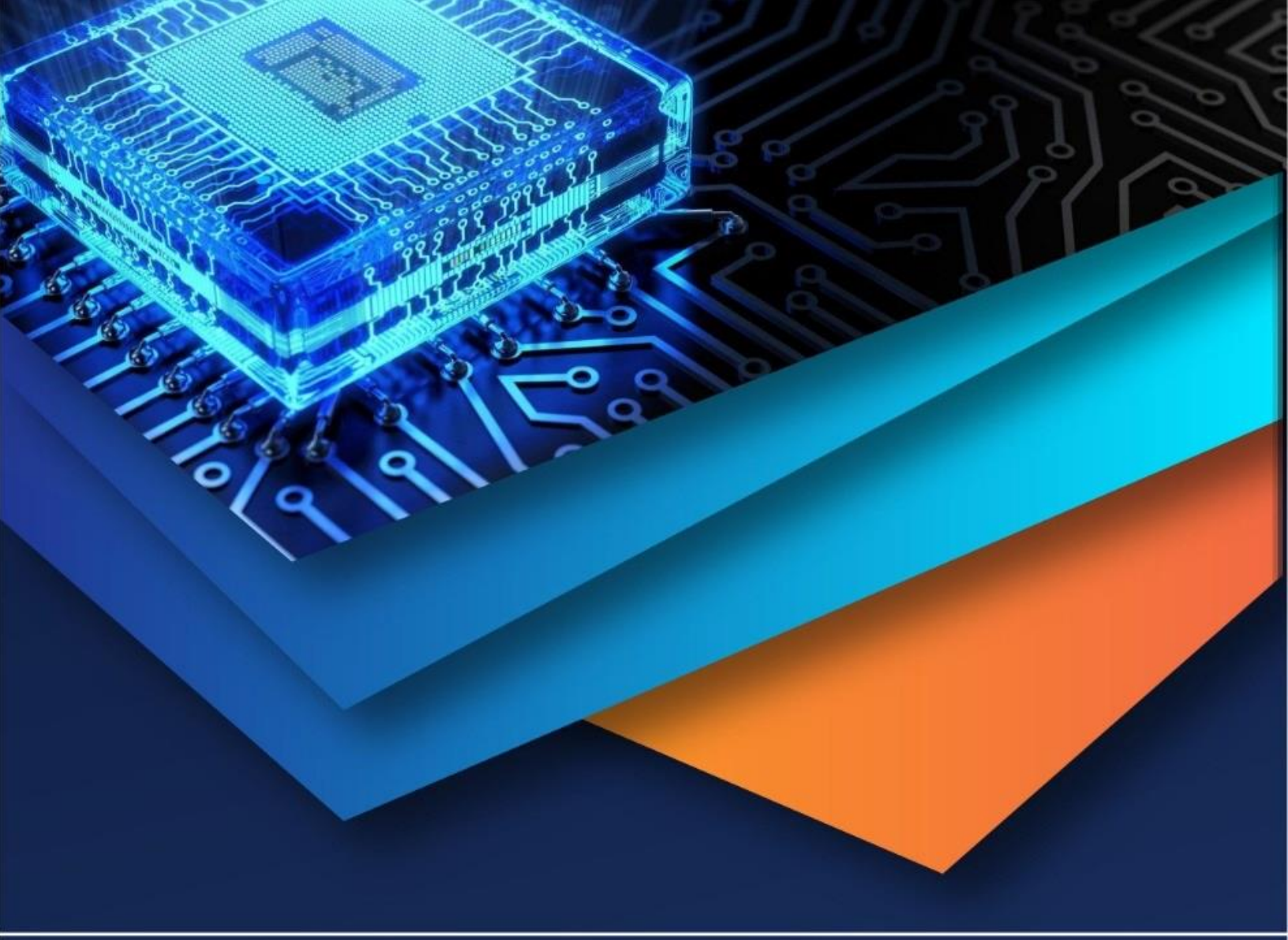

10.22214/IJRASET

45.98

IMPACT FACTOR: 7.129

IMPACT FACTOR: 7.429

INTERNATIONAL JOURNAL FOR RESEARCH

IN APPLIED SCIENCE & ENGINEERING TECHNOLOGY

Call : 08813907089 (24*7 Support on Whatsapp)