iJRASET
International Journal For Research in Applied Science and Engineering Technology

INTERNATIONAL JOURNAL FOR RESEARCH

IN APPLIED SCIENCE & ENGINEERING TECHNOLOGY

Volume: 5 **Issue:** VIII **Month of publication:** August 2017

DOI: http://doi.org/10.22214/ijraset.2017.8315

www.ijraset.com

Call: 08813907089 | E-mail ID: ijraset@gmail.com

International Journal for Research in Applied Science & Engineering Technology (IJRASET)
ISSN: 2321-9653; IC Value: 45.98; SJ Impact Factor:6.887
Volume 5 Issue VIII, August 2017- Available at www.ijraset.com

Design & Thermo-Mechanical Validation of IC Engine through FE Analysis

Santosh.A[1], S.S. Mahesh Reddy[2], Dr. A.K.Murthy[3]

[1]Student, [2]Assistant Professor, [3]Professor and Head, Department of Mechanical Engineering
East Point College of Engineering & Technology, Bangalore, India-560049

Abstract: The project aims at evaluating the heat transfer through the cylinder head. By performing a steady state thermal analysis, we can determine the temperatures that vary due to different modes of heat transfer that happens with respect to the engine and the atmosphere. The Geometrical model of cylinder head was modelled using Catia V5R18 and Finite element model was created using hype mesh and simulation was carried out in Ansys .Experimental analysis is carried out on cylinder head at prescribed input conditions and simulation is carried out using the Ansys .The variation in the temperature distribution considered to be of main interest in much application such as cooling system of an engine. The accurate thermal analysis simulation could result in critical design parameters required to be identified for improved life.

I. INTRODUCTION

Internal combustion engine(IC engine) is generally a heat engine in which fuel combustion takes place in combustion chamber alongside an oxidizer (air) which is essential part of fluid Working flow circuit. The expansion of High pressure and high temperature gases in an internal combustion engine as a result of combustion will induce direct force on few engine components. These force is mostly applied on rotor, piston nozzle or turbine blades. Due to this force the component is moved to a certain distance resulting in transformation of chemical into mechanical energy.

In an IC engine the combustion in intermittent like the two stroke and four stroke engines also with wankel rotary engine and six stroke engine variants.

IC engine is a important prime mover which are used in various fields such as automobile and power generation. In early days IC engine development power output, efficiency were main focus in research.

The internal combustion engine(IC engine) ,where fuel burning occurs within a constrain space known as combustion chamber. The high pressure and high temperature gases are created due to fuel's exothermic reaction along with an oxidizer. The critical feature of an internal combustion engine is the most useful work is obtained by the hot gases which is expanded directly to obtain moment

Combustion that is additionally referred to as burning is that the general chemical action of energy released from air fuel mixture. The ignition and fuel combustion of an internal combustion engine(ICE) takes place among the engine only. Then the engine fractionally converts the energy from combustion to work. The engine is of a moving piston a cylinder which is fixed. The combustion gases as a result of expansion will push the piston resulting in crank shaft to rotate .Finally in powertrain along with system of gears motion drives the wheels of the vehicle.

The word Internal combustion engine is mostly used in order to refer wankel engines, reciprocating engines and related designs where in combustion is intermittent. However engine with continuous combustion such as most rockets, jet engine and gas turbine are also considered as internal combustion engine

A. Literature Survey

"Wladyslaw mitianiec, Konrad Buuczek studied the analysis of thermal loads in an air cooled SI engine they stated that the cooling heat in the air-cooled two-stroke engine increases with the engine speed and cooling energy amounts above 30% of the total energy delivered with fuel. The simple method of the cooled energy was developed in the air-cooled engine. The measurement of the mass flow rate of the cooled air was the boundary condition to determine the convection coefficient for the heat exchange calculations.FEM enables the prediction of the surface temperatures of the walls, however there are still the difficulties with determination of the distribution of the heat flux to the walls. The highest temperature in SI two-stroke engine is in the area of the spark plug, and the outer ribs can be lessened in order to decrease the weight of the parts. The accuracy of the measured and calculated temperature depends on the determination of the outflow temperature of the air, which is not equal in the spaces between the ribs."

©IJRASET (UGC Approved Journal): All Rights are Reserved

M. Fadaei et al [9] The results of a thermo-mechanical analysis of a natural gas, internal combustion engine cylinder head are presented in this paper. The results are pertinent to the evaluation of overheating damage in critical areas. The three-dimensional geometries of the cylinder head and the water jacket were modeled by means of a computer-aided engineering tool. Commercial finite element and computational fluid dynamics codes were used to compute details of mechanical stress in the head and flow details in the cylinder and cooling jacket, respectively. A six cylinder, four-stroke diesel engine and a spark-ignition natural gas engine were modeled over a range of speeds at full load. Computed results, such as maximum allowable cylinder pressure, output power, BMEP and BSFC, were validated by experimented data in the diesel engine model. The results were in good agreement with experimental data.

Muhammet Cerit, Mehmet Coban "Temperature and thermal stress analyses of a ceramic-coated aluminum alloy piston used in a diesel engine" International Journal of Thermal Sciences, Volume 77, March 2014 The goal of this paper is to determine both temperature and thermal stress distributions in a plasma-sprayed magnesia stabilized zirconia coating on an aluminum piston crown to improve the performance of a diesel engine. Effects of the coating thickness on temperature and thermal stress distributions are investigated, including comparisons with results from an uncoated piston by means of the finite element method. Temperature and thermal stress analyses are performed for various coating thicknesses from 0.2 to 1.6 mm excluding the bond coat layer. Temperature at the coated surface is significantly higher than that of the uncoated piston. It is observed that the coating surface temperature increases with coating thickness by decreasing rate. Increase in the maximum temperature according to the uncoated piston is 64.3% for 1.0 mm thick coating. The higher combustion chamber temperature provided by means of coating results in the better thermal efficiency of the engine "

B. Methodology

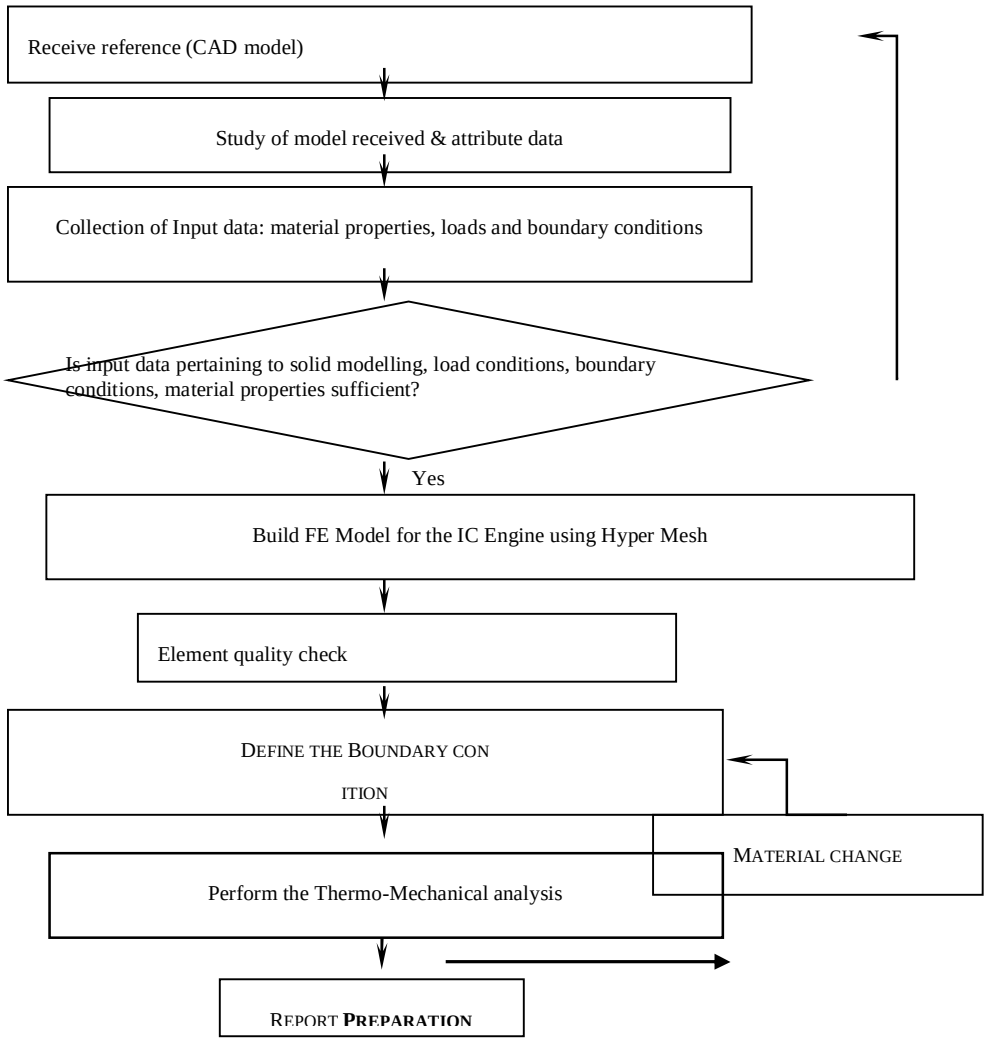

©IJRASET (UGC Approved Journal): All Rights are Reserved

C. Thermo Mechanical Analysis of IC Engine

Thermo mechanical Analysis is performed by applying conduction, convection and radiation for the thermal analysis and then applying mechanical load

A thermo mechanical analysis tends to compute the effects of constant loading conditions for conduction, convection and radiation structure and then carrying out mechanical load to see the result of combined loading by neglecting the effects of damping and inertia, which are caused due to time varying loads for castiron, Aluminum and Titanium +Nickel material. A static analysis can, nonetheless, include loads that are time varying and also constant inertia loads which are estimated as constant equivalent loads.

II. FINITE ELEMENT MODELLING AND THERMOMECHANICAL ANALYSIS

Finite element analysis is generally a latest tool that is used for analysis of numerical stress analysis such that it can be relevant for irregular geometry of solids which has material of heterogeneous properties. These numerical procedures will produce an better knowledge of reactions and interaction of singular tissues. Concept of finite element analysis(FEA) is basically a mathematical method of resolving difficult problems, it tends to provide simpler mathematical answer to biological problems.

Generally there are confusion among the term FEA and FEM. There is not much difference between the both FEM is more popular in universities where as FEA in industries. It was initially implemented as a process for mechanical structural problems to be solved which later renowned that for approximation of numerical problems it a common procedure. In order to calculate the strain and stress of an individual element it comprises of chain of computational problems. By using shaping functions interpolation of field variable can be achieved for validating and inspecting scientifically the clinical assumptions. The discretization of structure into elements which are linked by nodes. when selecting suitable mathematical model the degree of discretization and element type are necessary in order to achieve cost along with time effective results and accuracy

However mathematicians later discovered as FEM methods could be classified as subset of Galerkin method for solving PDE's .this way method gained broader mathematical foundation that extended its use solving many engineering problems.

A. Process of FEA

The finite element analysis (FEA) process can be divided into 3 stages

1) Pre processing
2) Analysis
3) Post processing

B. Loading and Boundary Conditions

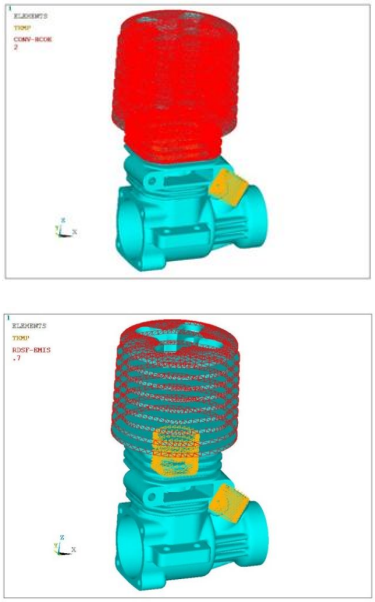

Fig : Thermal and Pressure Load applied

©IJRASET (UGC Approved Journal): All Rights are Reserved

C. Boundary Conditions

Boundary condition means the application of a constraint. For simulation, it is necessary to give proper boundary conditions to the model so that the results obtained match or give better results than the calculated one. The main function of boundary condition is to create and define constraints and loads on finite element models, it can be applied to the elements or the nodes of the structure. In Hyper mesh software, conditions can be entered and stored in a collector called load collectors.

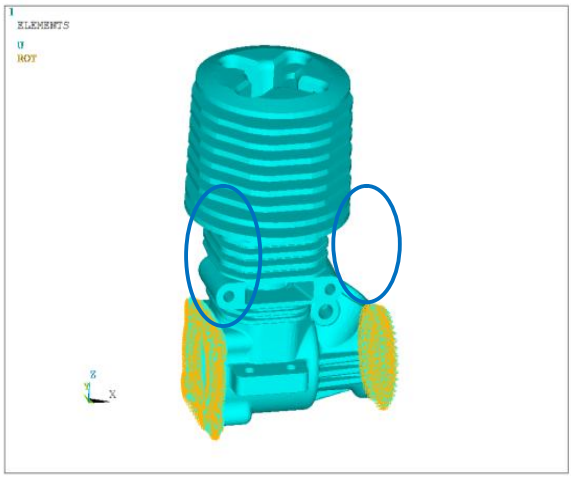

Fig : Boundary Condition

III. PREPROCESSING (MESHING)

A. Element used in Hypermesh

1) 3D Tetrahedral element is used.
2) Solid 70 for thermal and Solid 95 is used for the Tetrahedral element
3) Number of nodes 70099
4) Number of elements 285848

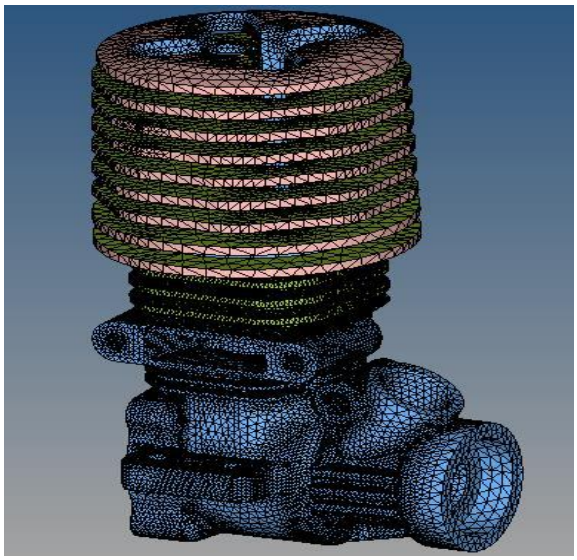

Fig: Finite element model of engine

©IJRASET (UGC Approved Journal): All Rights are Reserved

B. Material Properties

Titanium + Nickel

SLNo	Property	Value	Unit
1	Density	$7.58x\ 10^{-9}$	$tonnes/mm^3$
2	Tensile strength	470	MPa
3	Young's Modulus	115000	MPa
4	Poisson's Ratio	0.28	

III. RESULTS

A. Contour plots for Titanium +Nickel Alloy Material

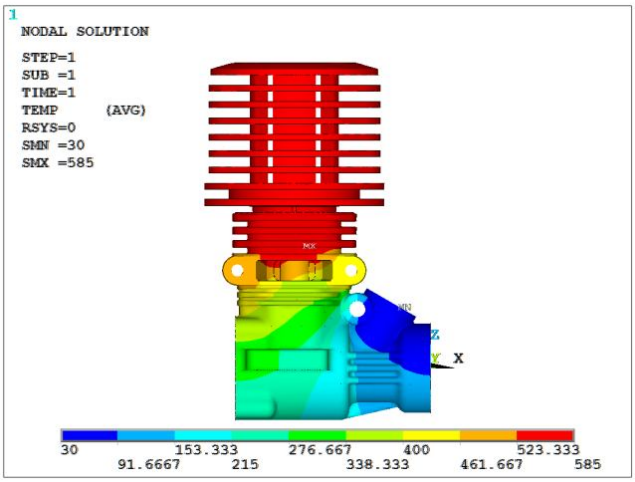

Fig: Temperature distribution Plot due to Conduction

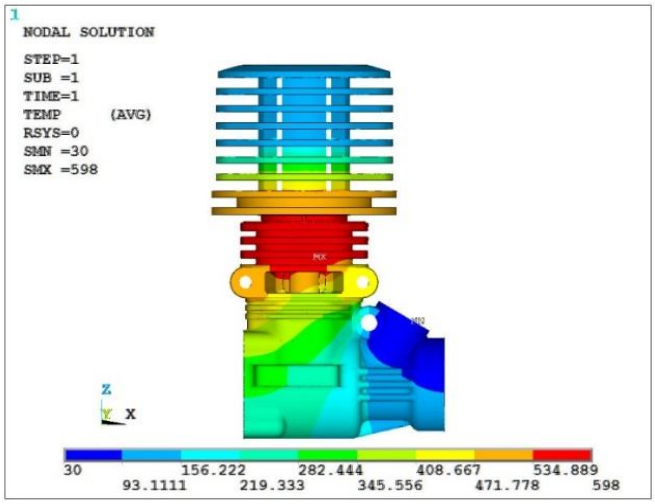

Fig : Temperature distribution Plot due to Conduction & Convection

©IJRASET (UGC Approved Journal): All Rights are Reserved

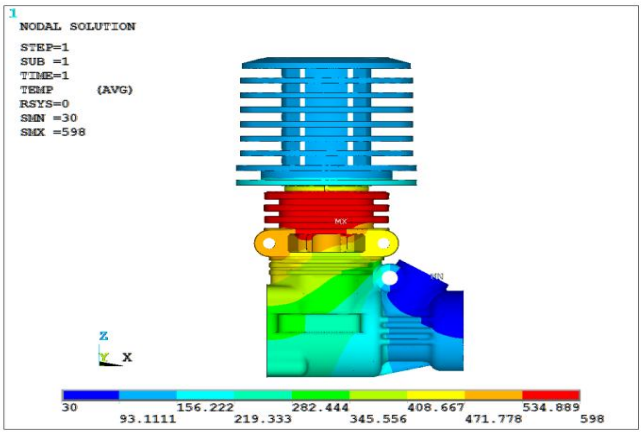

Fig : Temperature distribution Plot due to Conduction, Convection & Radiation

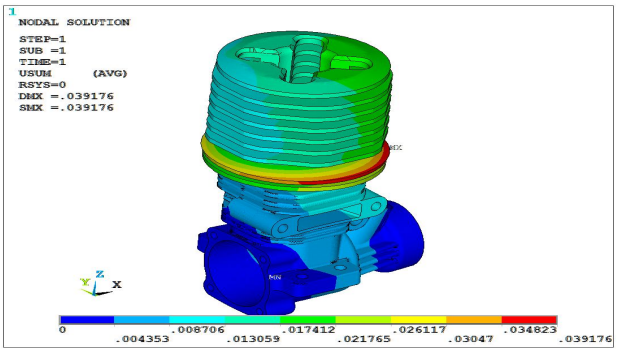

Fig : Deformation Plot for Thermal + Mechanical load

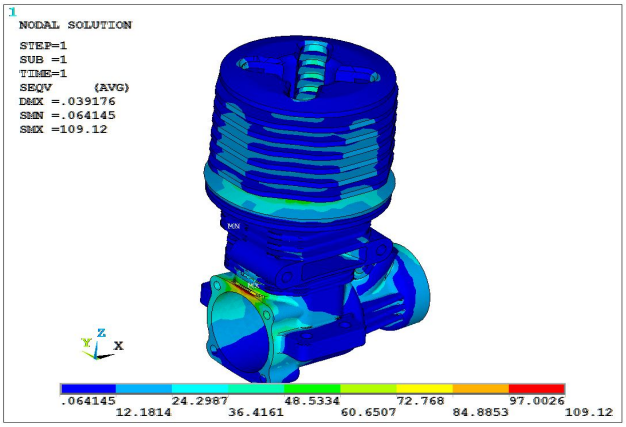

Fig : Vonmises Stress Plot for Thermal + Mechanical Load.

Sl no	Material	Observed stress (Mpa)	Temp Distribution	Yield stress (Mpa)	FOS (Initial design)
1	Titanium+ Nickel	109	30-598	320	2.93

©IJRASET (UGC Approved Journal): All Rights are Reserved

IV. COMPARISON OF SIMULATION RESULTS

Sl No	Valve material	Observed Stress(MPa)	Temperature Distribution °C	Yield Stress(MPa)	Factorof Safety (Initial Design)
1	Cast Iron	254	30-600	275	1.08
2	Aluminium	145	30-558.5	240	1.65
3	Titanium+ Nickel	109	30-598	320	2.93

V. CONCLUSION

Thermo-mechanical analysis was carried out with three different material Cast iron, Aluminum and Titanium+Nickel. From the summary observation it is understood that with all the material temperature distribution is within the melting temperature but the stresses observed in thermo mechanical load is high in case of cast iron and Aluminum but stress observed in Titanium+ Nickel Alloy is less and factor of safety observed is high . Hence it is suggested to go with Titanium+ Nickel Alloy for the design of the IC Engine

REFERENCES

[1] Wladyslaw Mitianiec and Konrad Buczek, Analysis of Thermal loads in Air cooled engine, Journal of KONES Powertrain and transport,2007
[2] M.Fadaei, H.Vafadar, A.Noorpoor, New thermo-mechanical analysis of cylinder heads using a multi-field approach, Scientia Iranica, 2010
[3] Muhammet Cerit, Mehmet Coban, Temperature and thermal stress analyses of a ceramic coated aluminum alloy piston used in a diesel engine,International Journal,2014
[4] A.Shamsudeen, S.Abdullah and A.K.Ariffin , Finite element simulation of a steady state stress distribution in a four stroke compressed Natural gas – Direct Injection engine cylinder head
[5] Heywood, J. Internal combustion Engine Fundamentals, McGraw-Hill, N.York,1988
[6] M.Divis, R.Tichanek, M.Spaniel, Heat transfer analysis of diesel engine head, Acta Polytechnica,2003

©IJRASET (UGC Approved Journal): All Rights are Reserved

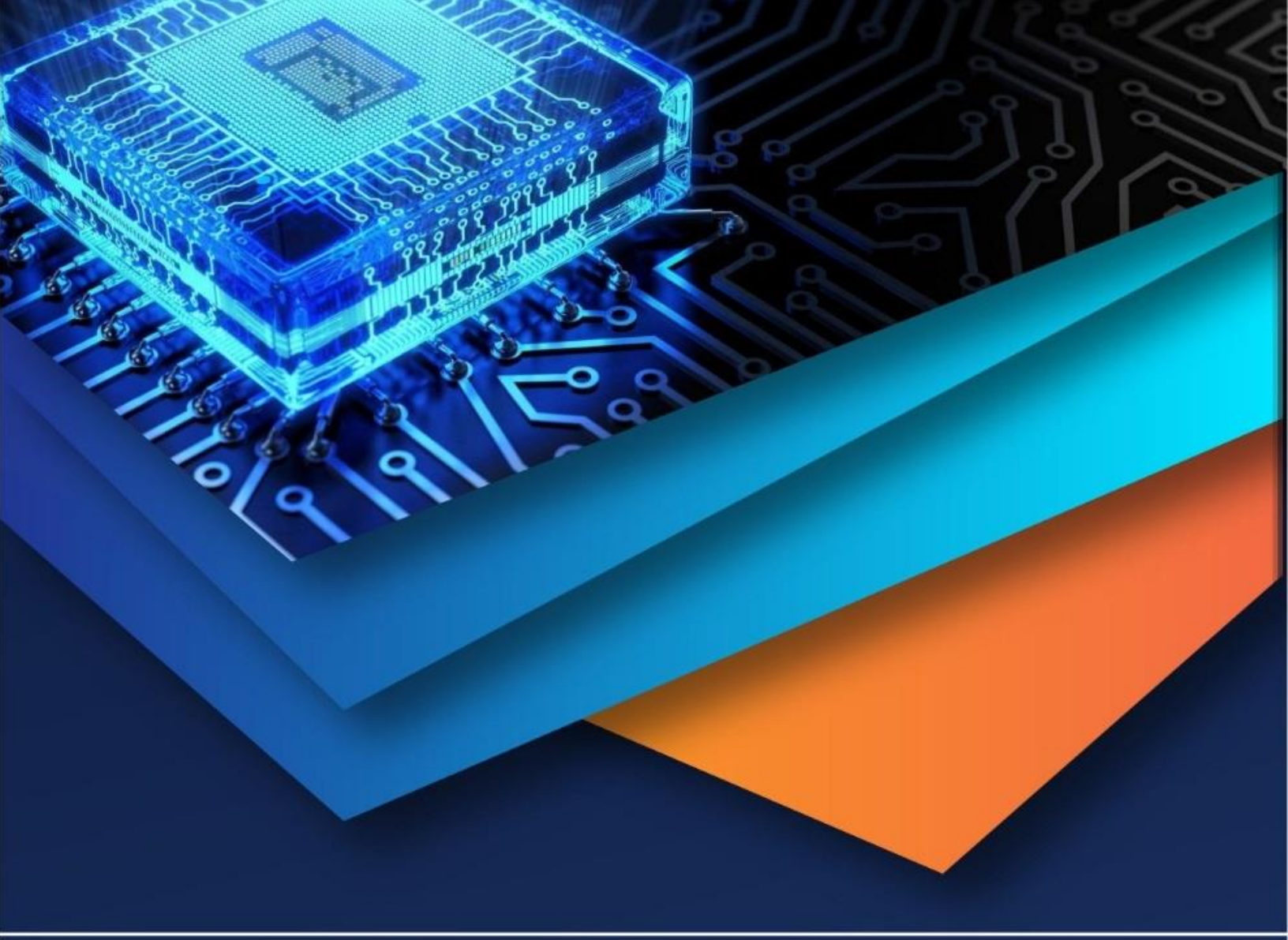

10.22214/IJRASET

45.98

IMPACT FACTOR: 7.129

IMPACT FACTOR: 7.429

INTERNATIONAL JOURNAL FOR RESEARCH

IN APPLIED SCIENCE & ENGINEERING TECHNOLOGY

Call : 08813907089 (24*7 Support on Whatsapp)