iJRASET
International Journal For Research in Applied Science and Engineering Technology

INTERNATIONAL JOURNAL FOR RESEARCH

IN APPLIED SCIENCE & ENGINEERING TECHNOLOGY

Volume: 9 **Issue:** VIII **Month of publication:** August 2021

DOI: https://doi.org/10.22214/ijraset.2021.37285

www.ijraset.com

Call: 08813907089 | E-mail ID: ijraset@gmail.com

International Journal for Research in Applied Science & Engineering Technology (IJRASET)
ISSN: 2321-9653; IC Value: 45.98; SJ Impact Factor: 7.429
Volume 9 Issue VIII Aug 2021- Available at www.ijraset.com

Design and Fatigue Optimization of Drive Shaft

Ashish Bawkar[1], Tejas Ambekar[2], Prathmesh Amle[3], Tejas Bhosale[4], Prof. Ashish Mujumdar[5]
[1, 2, 3, 4]*Students, Mechanical Engineering, Vishwakarma Institute of Technology, Pune, India*
[5]*Faculty, Mechanical Engineering, Vishwakarma Institute of Technology, Pune, India*

Abstract: This work aims towards the design and optimization of the drive shaft as there is increasing demand for weight reduction in an automobile vehicle. The drive shaft is basically a torque transmitting element which transmit the torque from the differential gearbox to the respective wheels. In general, the drive shafts are subjected to fluctuating loads as the torque requirement changes according to the road conditions. Due to this, the drive shaft should be designed considering fatigue failure. The Maruti Suzuki Ertiga model is chosen for design and optimization of the drive shaft. For the fatigue life predicting of the drive shaft, the S-N curve approach is used. Furthermore, the inner diameter of the shaft is varied to obtain the optimized diameter of a hollow shaft which can withstand these fluctuating loads without failure. Along with fatigue life prediction, the natural frequency of the hollow shaft is also calculated. Furthermore, the parametric analysis is carried out of fatigue FOS, Von mises stress, weight and natural frequency of the shaft by varying the diameter ratio of the hollow shaft, and the nature of variation of these parameters are plotted in their respective graphs. The design is validated by performing FEA analysis for each case of a hollow shaft using Ansys software. Finally, from the FEA analysis we conclude that the optimized dimensions of the hollow drive shaft are safe.

Keywords: Drive Shaft, Optimization, Fatigue Failure, S-N curve, Fatigue analysis, FEA.

I. INTRODUCTION

The drive shaft is a mechanical component or part which transmits torque to the respective wheels from a differential gearbox. In simple words, it is a torque transmitting element, its function is to drive the vehicle. It can also be used to transmits torque at varying angles between driveline components by implementing constant velocity joints or universal joints, etc. Basically, the materials that are used in the drive shaft are ANSI-AISI 1340-50, 3140-50, 4140, 4340, 4820 and 8620. Here, the material chosen is AISI 4340-oil quenched which is having mechanical property Density-7.85 g/cc, Ultimate Tensile Strength-1985 MPa, Yield Strength-1840 MPa, Poisson's Ratio-0.30, and Shear Modulus-81.5 GPa.

Fig.1 Drive shaft

For Fatigue life prediction we have S-N curves, E-N curve and Fracture mechanic's approach. The S-N curve is plotted between nominal stress amplitude (S) vs Cycles of Failure (N). From this, if the applied stress level is below the endurance limit of the material, the elements or components are said to have an infinite life. The S-N curve approach is basically used for high-cycle fatigue problems. In case of the E-N curve, we get to know that when strains are no longer elastic, such as in the presence of stress concentrations, the total strain can be used instead of stress as a similitude parameter. The E-N curve approach is used for the Low Cycle fatigue problems. The Fracture mechanics approach is for the propagation of cracks in material to characterize the material's resistance to facture. It is used to predict the failure of the component with an exciting crack.

Fatigue Failure criterion includes the Soderberg, Goodman, Gerber line and other approaches. For this project we used the Modified Goodman Criterion because it is a straight line joining (Se) on the ordinate to (Sut) on the abscissa, and the straight-line equations are linear and easy. So, it can be easily plotted, and the time for computing and plotting will be saved. It reveals subtleties insight into fatigue problems, and answers can be easily scaled from the graph.

©IJRASET: All Rights are Reserved

The whirling of the drive shaft can be expressed as when the drive shaft rotates at speed equal to the natural frequency of transverse oscillations, this causes vibrations in shaft which is eventually called whirling of the drive shaft. Natural frequency is the frequency at which a system tends to oscillate in the absence of damping force, and when the natural frequency gets equal to forced frequency, then resonance occurs. Theis resonance frequency will fail the drive shaft more quickly.

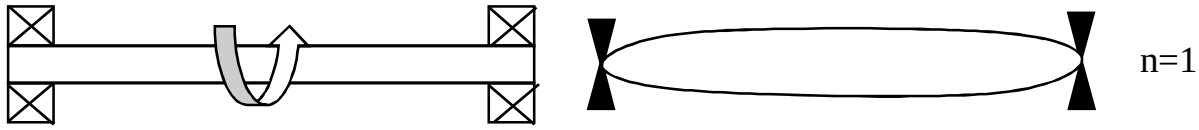

Fig. 2 Whirling of shaft

The drive shaft is assumed that the drive shaft is simply supported and free to rotate normal to the axis. The first mode of natural frequency is taken into account for the calculation. The above figure shows the shape of deflection for the first mode of natural frequency.

II. LITERATURE SURVEY

Shafts are designed by the applied torsional loads and selecting inner and outer diameters not to exceed the material's yield strength. Different combinations of inner and outer diameters will support the loads, and the final dimensions may be chosen based on the designer's attempt to minimize both mass and rotational inertia. [2] Fatigue was the dominant mechanism of drive shaft failure due to benchmarks on the cracked surfaces. Fatigue cracks initiated from the root fillet region of the spline gear. [3] The endurance limit correction factors, fatigue strength of the material and fatigue life of the component are considered to create a stress-cycle (S-N) diagram that is sustained by the shaft before damaged. [4] The Finite element analysis was carried out with full torsional load on a 3-D model of composite propeller shaft for torque bearing capacity, stiffness, bending natural frequency. [5] The weight reduction of the drive shaft can have a certain role in the weight reduction of the vehicle and is a highly recommended, desirable goal if it can be achieved with same cost and performance. It is possible to reduce the weight of the drive shaft considerably by optimizing the design parameters by satisfying all the constraints. [6] Factor of safety plays an important role during fatigue analysis. As the drive shaft is a critical part of a vehicle, it makes the designer to consider the higher factor of safety for application in the range of 2.7 to 12.8, but most of the time refers to the factor of safety as 3 to 4. The main objective of the paper is to design a hollow drive shaft which is having same performance as that of a solid shaft with the advantage of weight reduction. Furthermore, the parametric analysis is carried out to be to study the nature of variation of the Fatigue FOS, Von Mises stress, weight and natural frequency of the drive shaft when diameter ratio is varied. Also, effort is made to analyse the designed shaft for structural and fatigue failure using static structure analysis and to analyse the critical speed of the drive shaft using modal analysis.

III. DESIGN CALCULATIONS

A. Torque calculations

We have selected Maruti Suzuki Ertiga for drive shaft calculations. The following are the specifications of it.

TABLE I
SPECIFICATIONS

Engine Torque T_e (Nm.)	138
1 Gear Ratio i_1	2.875
Final Drive Ratio if	4.375

Maximum Torque at Drive shaft (T_{max}) = (T_e*i_1*i_f)/2= 867890.63 N.mm

B. Design of Solid Shaft

The drive shaft is subjected to pure torsional shear stress; therefore, we have $\tau = \frac{16*T_{max}}{\pi*d^3}$

According to maximum shear stress theory of failure, we have $\tau = \frac{0.5*S_{yt}}{FOS} = \frac{0.5*1840}{4}$ = 230 MPa

Therefore, the required diameter of drive shaft is given by, d = $\sqrt[3]{\frac{16*T_{max}}{\pi*\tau}}$ = 27 mm

Weight of the drive shaft is given by, W = $\rho * \frac{\pi}{4} * do^2 * l$

W = $7.85 * 10^{-6} * \frac{\pi}{4} * 27^2 * 240$ = 1.08 Kg

©IJRASET: All Rights are Reserved

C. Calculation of Modified endurance limit of drive shaft

Modified endurance limit Se = Ka × kb × kc × kd × ke × Se'

Endurance limit Se' = $0.5 * S_{ut}$ = 992.5 MPa

Surface finish factor Ka = $a * S_{ut}{}^{b}$ = $4.51 * 1985^{-0.265}$ = 0.6

Size factor Kb = $1.24 * d^{-0.107}$ = $1.24 * 27^{-0.107}$ = 0.88

Loading Factor kc = 0.59

Temperature Factor Kd = $\frac{S_T}{S_{RT}} = \frac{1.010}{1.008}$ = 1

Reliability Factor Ke = 99% = 0.814

Modified endurance limit Se = 251.675 MPa

Factor of safety using Modified Goodman Criteria,

σm= $\frac{\sigma_{max}-\sigma_{min}}{2}$, σa= $\frac{\sigma_{max}+\sigma_{min}}{2}$, n = $\frac{1}{\frac{\sigma_a}{S_e}+\frac{\sigma_m}{S_{ut}}}$

D. Optimization of hollow shaft

The torsional shear stress induced in the hollow drive shaft is given by,

τ = $\frac{16*Tmax}{\pi*d_o{}^3(1-C^4)}$

Here, C is the ratio of inside to outside diameter of hollow shaft.

Weight of the drive hollow shaft is given by,

W = $\rho*\frac{\pi}{4}*(do^2-di^2)*l$

Whirling of shaft, it is assumed that the drive shaft is simply supported and free to rotate normal to the axis.

f = $\frac{\pi}{2}*n^2*\sqrt{\frac{gEI}{wL^4}}$

w = $\rho*A*L$

As the value of C changes, the shear stress induced in the hollow shaft also changes, which will affect the fatigue factor of safety. Thus, maintaining the outer diameter constant, i.e., 27 mm and varying the C ratio, we get different inner diameter values as follows.

TABLE III
OPTIMIZATION TABLE

C ratio	Outer diameter do (mm)	Inner diameter di (mm)	Torsional shear Stress τ (MPa)	Goodman FOS n	Weight of Shaft W (kg)	Natural Frequency (Hz)
0.1	27	2.7	224.59	1.12	1.07	2054.50
0.2	27	5.4	224.93	1.12	1.04	2084.79
0.3	27	8.1	226.40	1.11	0.98	2134.31
0.4	27	10.8	230.47	1.09	0.91	2201.78
0.5	27	13.5	239.54	1.05	0.81	2285.60
0.56	27	15.1	249.06	1.01	0.74	2343.02

Thus, form the above table the safe dimensions of the drive shaft are do = 27 mm and di = 15.1 mm, exceeding the diameter ratio C above 0.56 will result in fatigue failure of the drive shaft.

©IJRASET: All Rights are Reserved

E. Calculations for SN Curve

Fatigue strength co-efficient σ'f = Sut + 345 = 2330 MPa

b = $\frac{-log*(\sigma'f/S_{e'})}{log*(2*Ne)}$ = -0.0588

Fatigue strength factor f = $\frac{\sigma'f}{S_{ut}} * (2 * 1000)^b$ = 0.75064

Alternating stress induced is given by, Sf = $a*N^b$

Where a and b values are:

TABLE IIIII
S-N CURVE TABLE

Low cycle fatigue region	High cycle fatigue region
a = Sut = 1985 MPa	a = $\frac{(f*Sut)^2}{s_e}$ = 8821.36 MPa
b = $\frac{\log(f)}{3}$ = -0.0415	b = $-\frac{1}{3} * log\left(\frac{f.Sut}{s_e}\right)$ = 0.2574

From the above equation of low cycle and high cycle fatigue we plotted SN curve for the drive shaft.

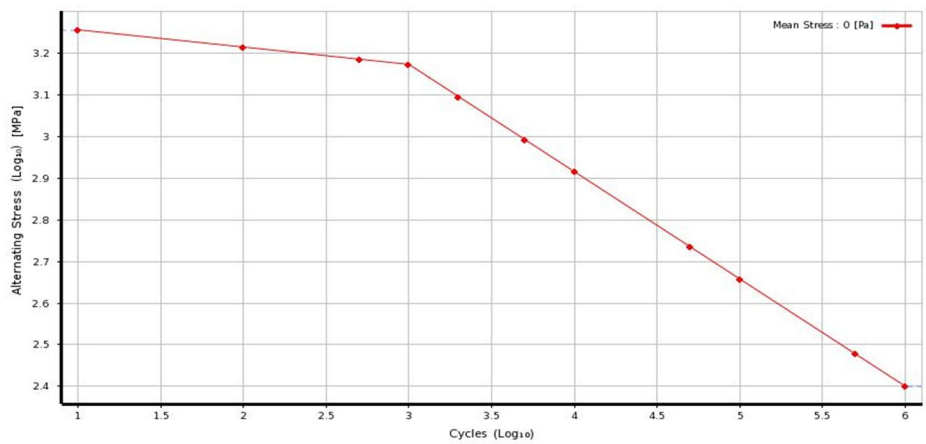

Fig. 3 S-N curve of drive shaft

IV. RESULTS

A. Ansys Results

Static structure module is used to carry out Structural and fatigue analysis, the boundary conditions that are applied to the drive shaft are, one end of the shaft is fixed and the other end of the shaft is subjected to torsional moment. The modal module is used to carry out natural frequency analysis, the boundary condition that is applied to the drive shaft is both the ends of the shaft are fixed. Depending on these conditions, the FEA analysis is carried out, and the following results are obtained for each case

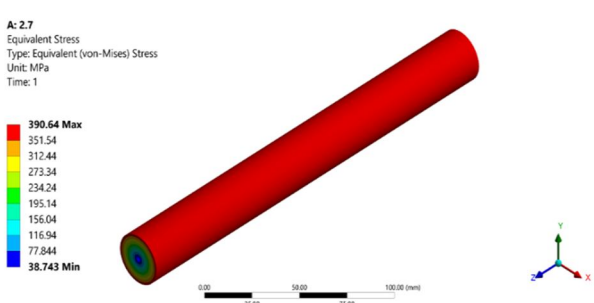

Fig. 4.1 Von mises Stress for C = 0.1

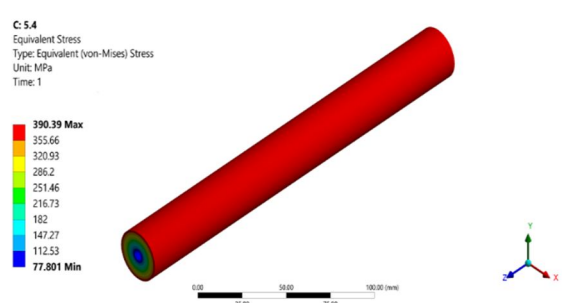

Fig. 4.2 Von mises Stress for C = 0.2

©IJRASET: All Rights Reserved

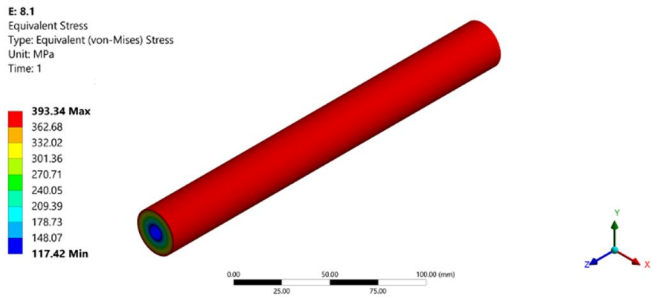

Fig. 4.3 Von mises Stress for C = 0.3

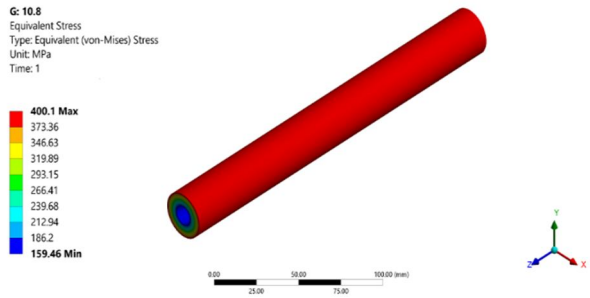

Fig. 4.4 Von mises Stress for C = 0.4

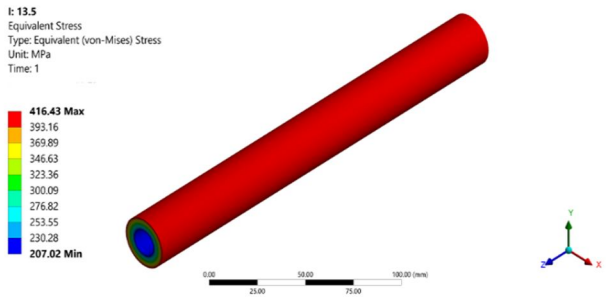

Fig. 4.5 Von mises Stress for C = 0.5

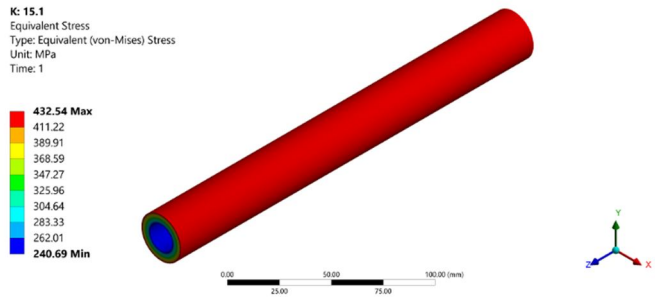

Fig. 4.6 Von mises Stress for C = 0.56

Fig. 4 Von mises Stress

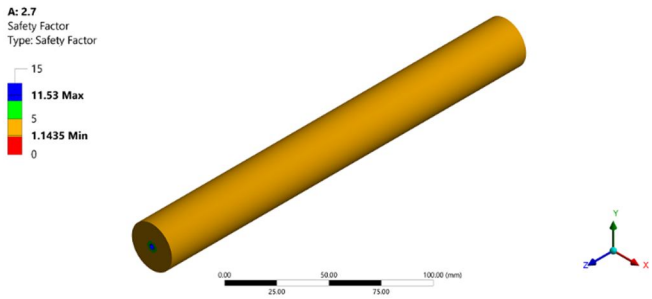

Fig. 5.1 Fatigue FOS For C = 0.1

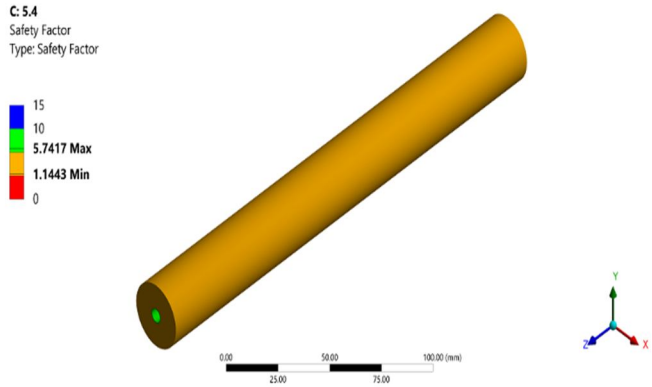

Fig. 5.2 Fatigue FOS For C = 0.2

©IJRASET: All Rights are Reserved

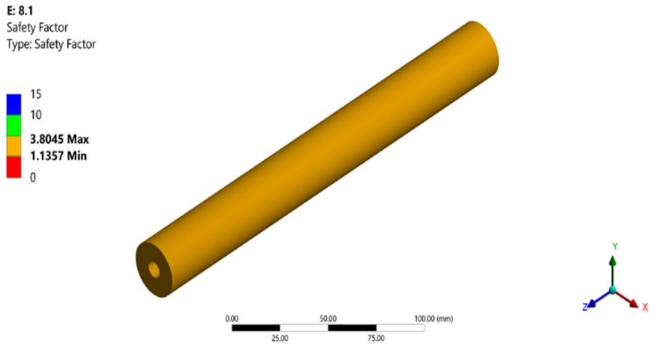

Fig. 5.3 Fatigue FOS For C = 0.3

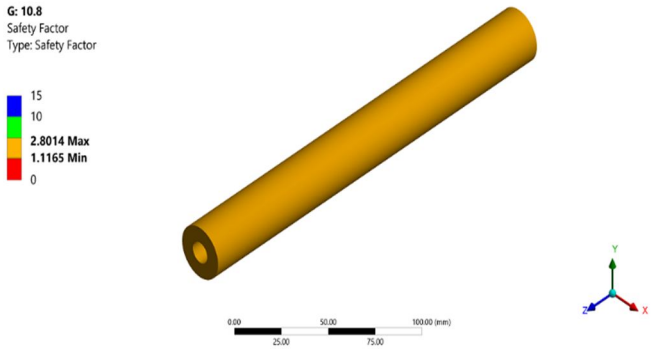

Fig. 5.4 Fatigue FOS For C = 0.4

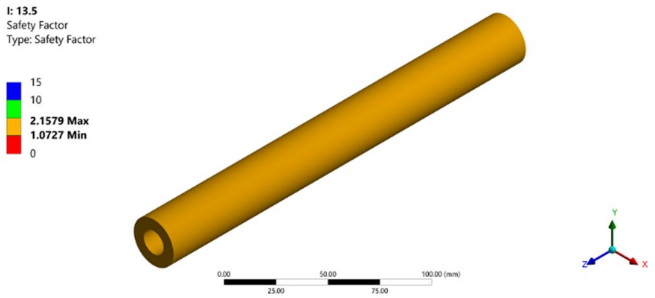

Fig. 5.5 Fatigue FOS For C = 0.5

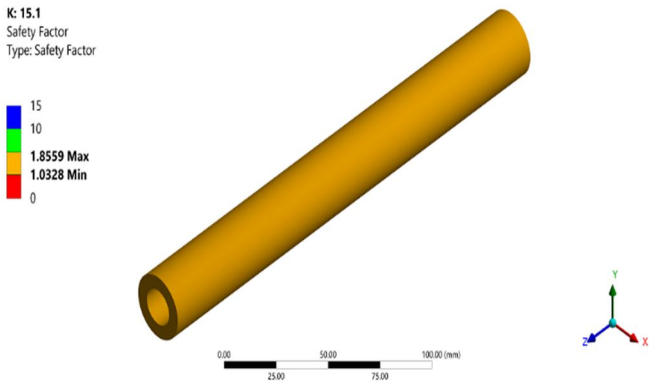

Fig. 5.6 Fatigue FOS For C = 0.56

Fig.5 Fatigue FOS

©IJRASET: All Rights are Reserved

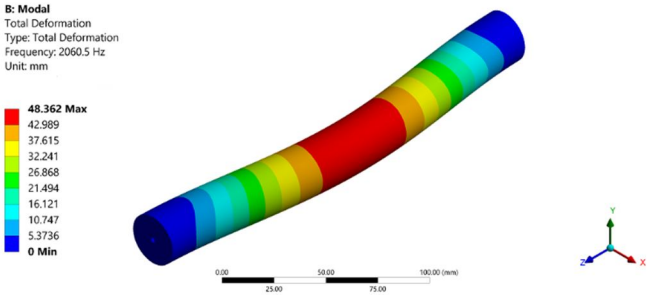

Fig. 6.1 Natural Frequency for C = 0.1

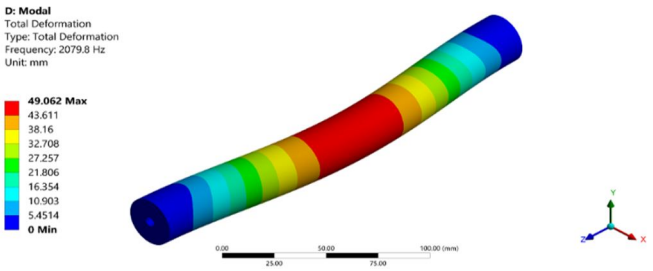

Fig. 6.2 Natural Frequency for C = 0.2

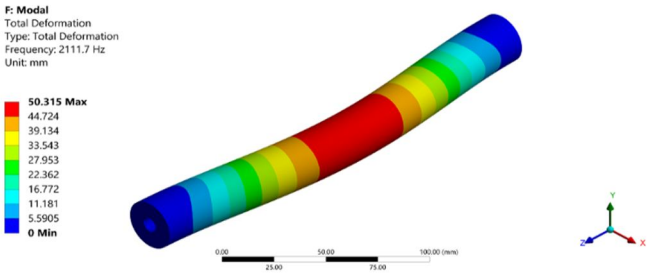

Fig. 6.3 Natural Frequency for C = 0.3

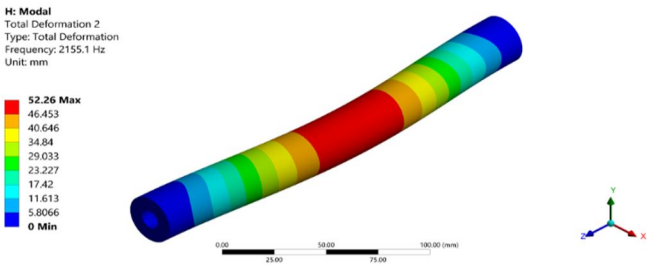

Fig. 6.4 Natural Frequency for C = 0.4

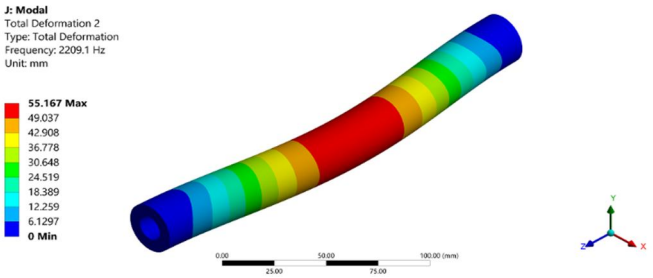

Fig. 6.5 Natural Frequency for C = 0.5

©IJRASET: All Rights are Reserved

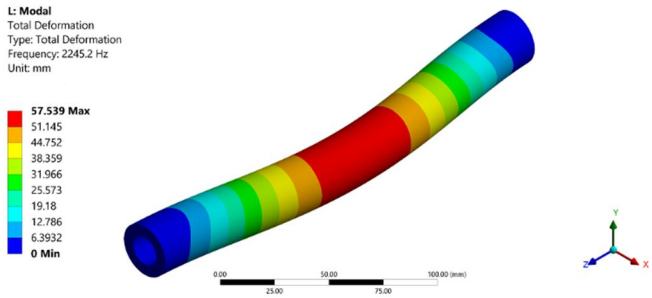

Fig. 6.6 Natural Frequency for C = 0.56

Fig.6 Natural Frequency

B. Validation

The von mises stress for shaft subjected to pure torsion is given by,

$\sigma v = \sqrt{3} * \tau$

TABLE IVV
VALIDATION TABLE

Diameter Ratio C	Von Mises stress		Fatigue FOS		Whirling of shaft	
	Analytical Result (MPa)	FEA Result (MPa)	Analytical Result	FEA Result	Analytical Result (Hz)	FEA Result (Hz)
0.1	389.00	390.64	1.12	1.14	2054.50	2060.5
0.2	389.58	390.89	1.12	1.14	2075.37	2079.8
0.3	392.14	393.34	1.11	1.13	2105.79	2111.7
0.4	399.18	400.1	1.09	1.12	2153.38	2155.1
0.5	414.89	416.43	1.05	1.07	2206.76	2209.1
0.56	431.38	432.54	1.01	1.03	2243.27	2245.2

From the above tables we can conclude that the analytical result and FEA result have an error less than 1%. Thus, we conclude that the FEA analysis is correct.

V. DISCUSSION

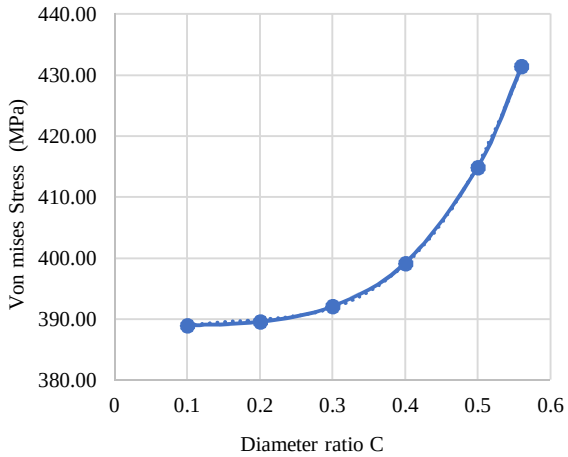

Fig.7 Graph betweenVon mises Stress Vs Diameter ratio

©IJRASET: All Rights are Reserved

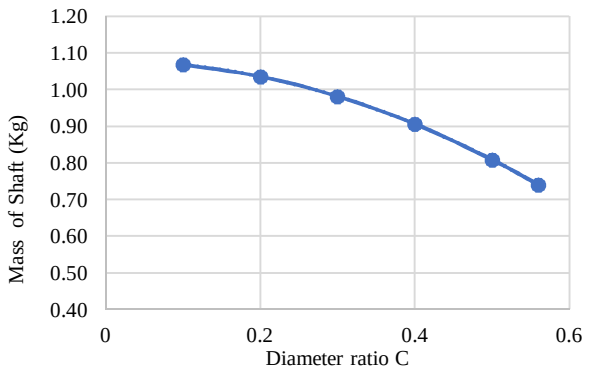

Fig.8 Graph between Mass of Shaft Vs Diameter ratio

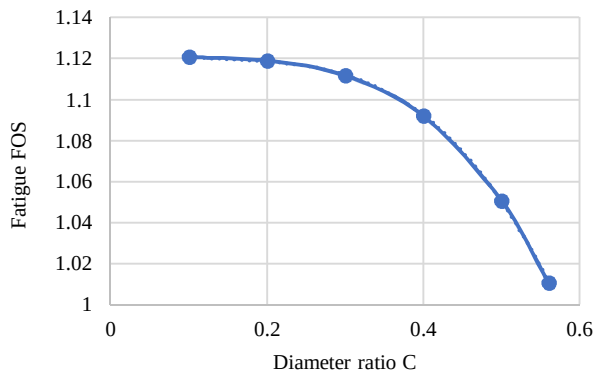

Fig.9 Graph between Fatigue FOS Vs Diameter ratio C

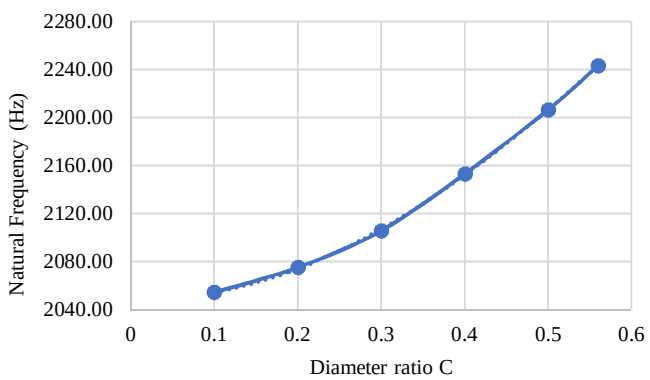

Fig.10 Graph between Natural Frequency Vs Diameter Ratio C

From graph 1 we can conclude that, as the diameter ratio increases, the Von Mises stress induced in the shaft also increases. This is because the thickness of the hollow shaft decreases. From graph 2 we can conclude that, as the diameter ratio increases, the mass of the hollow shaft decreases. This is because the thickness of the shaft decreases. From graph 3 we can conclude that, as the diameter ratio increases, fatigue factor of safety decreases. This is because the amplitude of stress induced in the hollow shaft increases. From graph 4 we can conclude that, as the diameter ratio increases, the natural frequency of the shaft increases. This is because the mass of the hollow shaft decreases.

©IJRASET: All Rights are Reserved

VI. CONCLUSION

The drive shaft is optimized and the final safe dimensions of the drive shaft for the given torque are outer diameter 27 mm and inner diameter 15.1 mm. The weight of the drive shaft is reduced by 68.52% when compared to the solid drive shaft. Also, the parametric analysis is carried out for the hollow shaft to study the nature of variation of the Fatigue FOS, Von Mises stress, weight and natural frequency of the drive shaft when diameter ratio is varied. Furthermore, the design of the drive shaft is validated using a FEA software Ansys. The results obtained from Ansys and the analytical method have an error less than 1%. This concludes that the optimized design of the drive shaft is safe.

REFERENCES

[1] J. P. Parsons, "The Design of Formula SAE Half Shafts for Optimum Vehicle Acceleration," SAE International, pp. 7-8, 2013.
[2] Li-Hui Zhaoa, Qing-Kun Xingc, Jia-Yu Wanga, Shen-Long Lic, Song-Lin Zhenga, "Failure and root cause analysis of vehicle drive shaft," Engineering Failure Analysis, ScienceDirect, pp. 9-10, 2019.
[3] Engel, Sara Salman, Hassan Al-Maeeni, "Failure Analysis and Fatigue Life Estimation of a Shaft of a Rotary Draw Bending Machine," International Journal of Mechanical and Mechatronics Engineering, vol. 11, pp. 5-6, 2017.
[4] Reddya, Ch. Nagarajub and P. S. K., "Weight optimization and Finite Element Analysis of Composite automotive drive shaft for Maximum Stiffness," in Materials Processing and Characterization (ScienceDirect), 2017.
[5] S. R. M. M. Ammineni Syam Prasada, "Experimental Investigations on Static and Dynamic Parameters of Steel and Composite Propeller Shafts with an Integrated Metallic Joints," ScienceDirect Materials, pp. 8-9, 2018.
[6] R. Huff, "Factors of safety," SAE International, vol. 11.
[7] B. Jame, P Raoa, D. V Srikanthb, T. Suresh Kumarc, L. Sreenivasa Raod, "Design and analysis of automotive composite propeller shaft using fea," in Material Today (ScienceDirect), 2016.
[8] V.B. Bhandari, Design of Machine Element, McGraw-Hill Publications, 2017.
[9] Richard G. Budynas and J. Keith Nisbett, Shigley's Mechanical Engineering Design, McGraw-Hill Publications.
[10] R. Subramanian, strength of material, Oxford University education.

©IJRASET: All Rights are Reserved

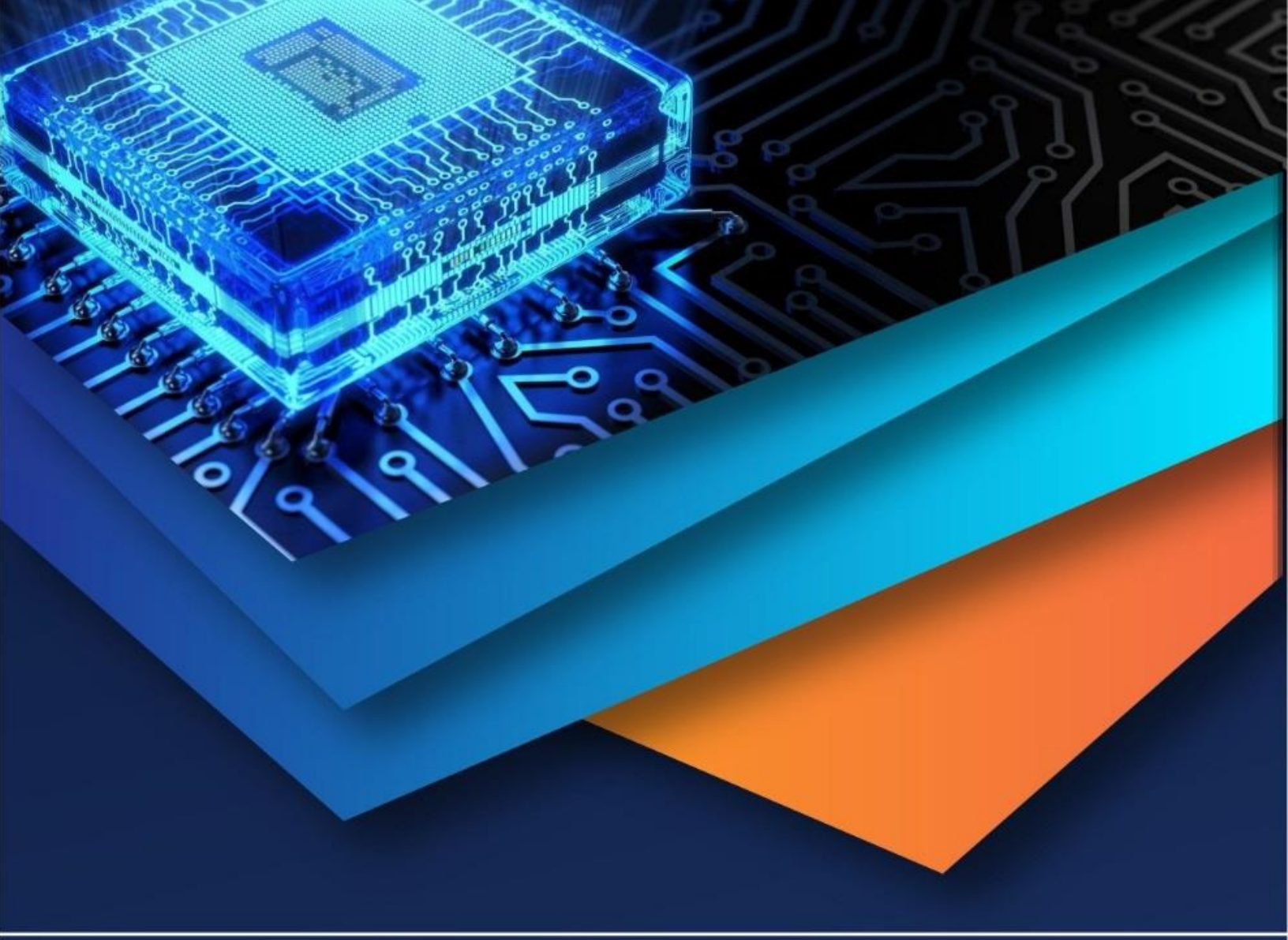

10.22214/IJRASET

45.98

IMPACT FACTOR: 7.129

IMPACT FACTOR: 7.429

INTERNATIONAL JOURNAL FOR RESEARCH

IN APPLIED SCIENCE & ENGINEERING TECHNOLOGY

Call : 08813907089 (24*7 Support on Whatsapp)